Feasibility Study – Biogas upgrading and grid injection in the Fraser Valley, British Columbia

Prepared for:

BC INNOVATION COUNCIL

Prepared by:
Electrigaz Technologies Inc

Electrigaz

Final Report
June 2008

Funding by:

British Columbia – The Best Place on Earth

QuestAir – Pure Innovations™

Terasen Gas

Organic Resource Management Inc.

BC Milk Producers Association

CCGA – Canadian Gas Association / Association canadienne du gaz

BC Greenhouse Growers' Association

BC hydro

BC Innovation Council

Abstract

This study, which follows a previous piece of work[1] produced in 2007 for evaluating the technical and economical potential for anaerobic digestion in the Fraser Valley, focuses on the potential of upgrading farm produced biogas to biomethane (a renewable natural gas) and its subsequent sale in existing gas markets. During this study, several technologies and existing biogas upgrading projects are reviewed to derive an average cost for production of biomethane from organic waste. Environmental impacts are assessed in light of different biomethane utilisations, including automotive applications. Finally, a case study of a farm is performed to acquire specific details on any regulatory and/or economical barriers that face biomethane production in the Fraser Valley.

[1] Feasibility Study – Anaerobic Digester and Gas Processing Facility in the Fraser Valley, British Columbia

Executive Summary

Anaerobic digestion is the process of converting organic waste into biogas energy. Composed of methane and carbon dioxide, biogas is typically used in boilers and electric generators to produce heat and power. Biogas can also be refined into biomethane or renewable natural gas (RNG) and injected into the existing natural gas network for distribution and consumption. Unlike natural gas, biomethane is a clean and renewable carbon-neutral fuel.

Scenic View Dairy, MI -Biomethane project Source: MGU

Anaerobic digestion and biogas upgrading are common and mature technologies used extensively throughout Europe and the USA. In Canada, biogas production is starting to increase. This growth is primarily in Ontario due to favourable renewable energy feed-in tariff laws.

Results from a previous study[2] show that organic wastes generated in the lower mainland have the potential to produce and displace the equivalent of over 120 million cubic meter of natural gas per year, i.e. approximately 3.5% of the current lower mainland natural gas consumption.

Total energy potential of organic waste material in the Fraser Valley is estimated at 120 million cubic meters per year of biomethane. This is equivalent to diesel consumed by 80,000 cars (100 million litres).

Biomethane can also be used to fuel compressed natural gas (CNG) vehicles. Automotive application of biomethane has the potential to displace over 100 million litres of diesel and reduce greenhouse gas (GHG) emissions by 335,000 tonnes per year.

[2] Feasibility Study – Anaerobic Digester and Gas Processing Facility in the Fraser Valley, British Columbia

Biomethane refuelling station Source: IEA

With increasing environmental concerns and energy prices, gas utilities are currently looking for clean natural gas alternatives. For example, Terasen Gas has demonstrated a keen interest in buying biomethane for its renewable, carbon-neutral benefits and its prospective price stability.

In BC, conversion of biogas energy into biomethane presents clear economical and environmental advantages compared to its conversion into electricity. Because BC hydroelectricity is inexpensive and does not emit GHGs, biomethane production offers a more sensible alternative use of biogas energy.

On-farm biomethane production can deliver renewable natural gas at a price that competes with fossil fuel

Currently, the natural gas commodity charge is $8.29/GJ. Depending upon revenues from gate fees, for accepted waste streams, biomethane commodity charge could range from $9/GJ to $15/GJ. Locally produced biomethane has the advantages of carbon tax exemption ($1.5/GJ in 2012) and avoided pipeline transportation cost that natural gas from Alberta and northern BC incur.

Biomethane offers several environmental benefits for BC. Utilisation of biomethane as vehicle fuel to replace diesel and gasoline would result in a significant improvement of air quality in the lower mainland.

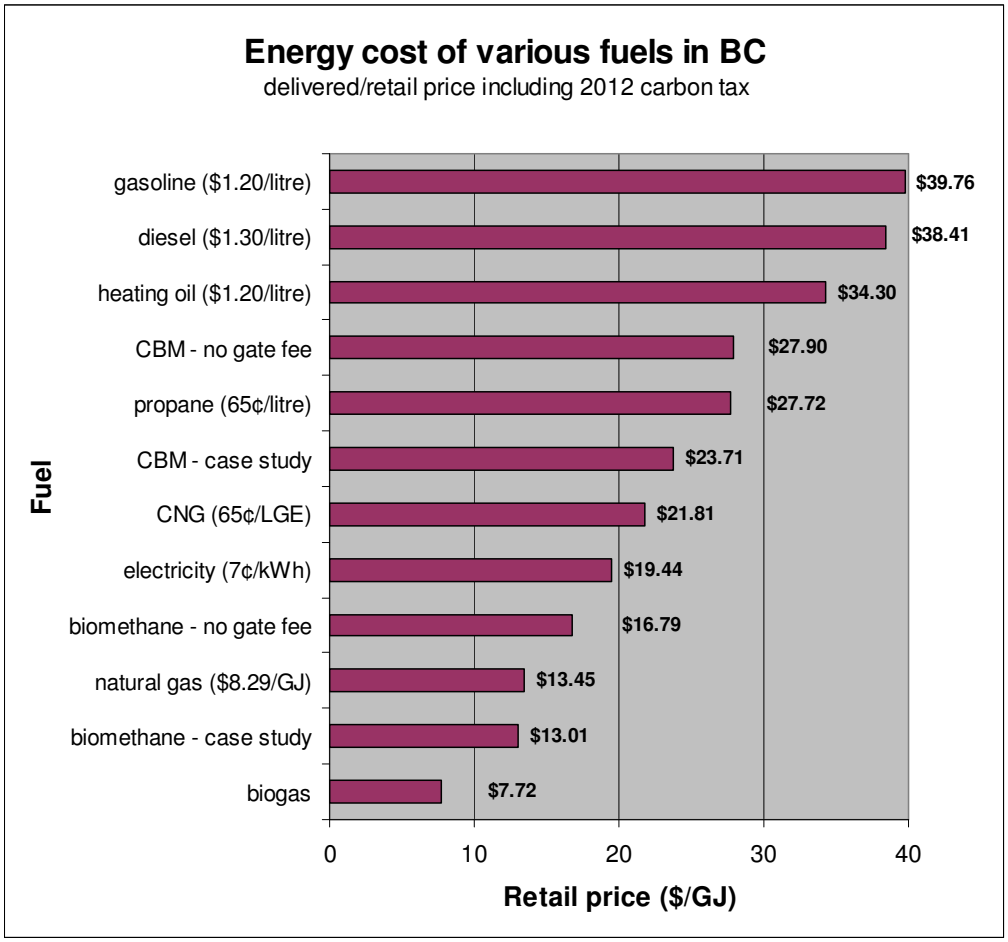

CBM: Compressed biomethane, CNG: Compressed natural gas, LGE: Litre of gasoline equivalent

Higher gate fees for land filling of organic material would create an incentive to divert organic material from landfills directly towards anaerobic digesters. This would increase the production of biomethane and could reduce the use of chemical fertilization on farms by recycling food waste nutrients onto farm land. However, Recycling food waste nutrients would only be done according to an approved nutrient management plan. Regulatory framework for importation of off-farm waste onto farm is currently under development by the BC government in collaboration with the Agricultural Land Commission.

The development of a biogas industry in the Fraser Valley would stimulate rural economic development and funnel significant revenue into a local rural economy.

In its quest to become carbon neutral, the BC government could take a leadership role by purchasing biomethane at a premium in order to fuel its vehicle fleets and heat its buildings.

Biomethane production from organic waste is a practical, sensible and inexpensive solution to mitigate GHG emissions and improve air quality in the Fraser Valley.

Acknowledgements

This study would not have been possible without the help and support of:

Fraser Valley Biogas Upgrading Study Steering Committee:
BC Innovation Council, BC Greenhouse Growers' Association, BC Hydro, BC Milk Producers Association, Organic Resource Management Inc., Terasen Gas, Canadian Gas Association, Questair, Ministry of Agriculture and Lands, Ministry of Energy, Mines and Petroleum Resources, and Ministry of Environment.

BC Innovation Council: Richard Hallman
Canadian Gas Association: Shahrzad Rahbar
Terasen Gas: Gordon Doyle, David Bennett, Edmund Leung, Chris Wilcock
Questair: Andrew Hall, Sean Mezei
BC Milk Producers Association: Paris Thomas, Dick Klein Geltink
BC Greenhouse Growers' Association: Jonathan Bos, Mary-Margaret Gaye, Amandeep Bal
BC Hydro: Eric Mewhinney
IAF: Coreen Moroziuk
BC Ministry of Agricultre and Lands: Matt Dickson, Gustav Rogstrand
BC Ministry of Energy, Mines and Petroleum resources: Garth Thoroughgood
BC Ministry of Environment: Alisa Williams
Organic Resource Management Inc.: Doug Carruthers
Xebec: Kurt Shorchack
Phase-3 Renewables: Norma McDonald
Puente Hills Landfill: Ed Wheelis
King County South Waste Water Treatment Plant: Rick Butler
Michigan Gas Utilities: Chuck Hauska, Curtis Cope

Electrigaz would like to thank its associates: Anders Dahl, Johan Benjaminsson from Biomil AB, Annie Lefebvre Ing. and Torsten Fischer from Krieg & Fischer GmbH for their valuable contributions.

Special thanks to Gordon Doyle from Terasen Gas, Matt Dickson and Gustav Rogstrand from Ministry of Agriculture and Lands for their vision and constant support.

Glossary and Abbreviations

AD	Anaerobic digestion
ALCA	Agricultural Land Commission Act
ALR	Agricultural land reserve
BC	British Columbia
BCUC	BC Utilities Commission
Biomethane	Biogas upgraded to natural gas quality
CBM	Compressed biomethane
CHP	Combined heat and power
CNG	Compressed natural gas
DM	Dry matter content
Digestate	Anaerobically digested material
DW	Dry weight
FVRD	Fraser Valley Regional District
GHG	Greenhouse gases
GJ	Gigajoule (10^9 Joules), unit of energy
GVRD	Greater Vancouver Regional District (Metro Vancouver)
HHV	Higher heating value
ICI	Institutional, Commercial and Industrial
IPPs	Independent power producers
kW	Kilowatt, unit of power
kWe	Kilowatt, unit of electrical power
kWh	Kilowatthour, unit of energy
kWhe	Kilowatthour, unit of electrical energy
LFV	Lower Fraser Valley
LGE	Litre of gasoline equivalent
LHV	Lower heating value
LNG	Liquid natural gas
LNG	Liquid petroleum gas
MJ	Mega Joule (10^6 Joules), unit of energy
Moothane	Methane made from cow manure
MSW	Municipal solid waste
MWh	Megawatthour, unit of energy
MWhe	Megawatthour, unit of electrical energy
NGV	Natural gas vehicle
nm^3	Standard cubic meter
O&M	Operation and maintenance
PSA	Pressure swing adsorption
RNG	Renewable natural gas
RPSA	Rapid cycle pressure swing adsorption
Tonne	Metric ton
VFAs	Volatile fatty acids
VOC	Volatile organic compound
WWTP	Waste water treatment plant

Table of Content

Abstract i
Executive Summary ii
Acknowledgements vi
Glossary and Abbreviations vii
Table of Content viii
List of Figures xi
List of Tables xi
1. Introduction 1
1.1 About biomethane 1
1.2 Study challenges 2
2. Biogas cleaning and upgrading technologies 3
2.1 Biogas cleaning 3
2.1.1 Hydrogen sulphide (H_2S) 3
2.1.2 Water vapour 6
2.1.3 Ammonia 7
2.1.4 Particles 7
2.1.5 Siloxanes 7
2.1.6 Halogenated hydrocarbons 7
2.1.7 Oxygen 7
2.1.8 Nitrogen 8
2.2 Biogas upgrading technologies 8
2.2.1 Water wash 9
2.2.2 Chemisorption and physisorption 11
2.2.3 Pressure swing adsorption 12
2.2.4 Membrane separation 13
2.2.5 Cryogenic distillation 14
2.2.6 Summary of upgrading technologies 14
2.3 Biomethane post treatment 15
2.3.1 Odourizing 15
2.3.2 Energy content 15
2.3.3 Emissions mitigation 16
2.4 Grid injection and monitoring 16
3. Biogas upgrading economics 20
3.1 Biogas cost 20
3.2 Biogas upgrading cost 22
3.3 Other cost 24
3.3.1 Waste stream mitigation 24
3.3.2 Gas grid connection 25
3.4 Pressurizing cost 25
3.5 Total biomethane production cost 26

4. Environmental impact 27
4.1 Air quality 27
4.1.1 Odours 27
4.1.2 Gaseous emissions 27
4.1.3 Boiler 28
4.1.4 Flaring system 29
4.1.5 Regenerative and catalytic off-gas combustion system 29
4.1.6 Non-regenerative water wash 30
4.1.7 Fuel displacement 30
4.2 Water Quality 31
4.2.1 Non-regenerative water wash 31
4.2.2 Sodium hydroxide H_2S removal 31
4.2.3 Condensate removal 31
4.3 Waste disposal 31
4.4 Greenhouse Gas (GHG) reduction 31
4.4.1 Natural gas displacement 32
4.4.2 Vehicle fuel displacement 32
5. Farm case study 32
5.1 Case farm selection procedures 33
5.2 Case farm description 33
5.2.1 Eastern farm site 34
5.2.2 Western farm site 34
5.2.3 Neighbouring farms 35
5.3 Feedstock & biogas energy potential 35
5.3.1 On-farm feedstock 35
5.3.2 Off-farm feedstock 36
5.3.3 Biogas energy potential 36
5.3.4 Site Schematic and process flow chart 37
5.4 Recommended biogas plant specifications 38
5.4.1 Off-farm receiving pit 39
5.4.2 Mixing pit 39
5.4.3 Primary digester 39
5.4.4 Secondary digester 40
5.4.5 Pasteurization unit 40
5.4.6 Biogas cleaning 40
5.4.7 Biogas upgrading 41
5.4.8 Biogas injecting and monitoring 41
5.4.9 Boiler 42
5.4.10 Safety 42
5.4.11 Manure separator 43
5.4.12 Digestate storage 43
5.4.13 Control and upgrading building 43

5.5 Economic analysis of the project 43
5.5.1 Capital investment 44
5.5.2 Cashflow analysis 45
5.5.3 Sensitivity analysis 46
5.6 Environmental and social impact assessment 47
5.6.1 Estimated project emissions 48
5.6.2 Fuel displacement 48
5.6.3 Farm nutrient management 49
6. Project development guidelines 50
6.1 Feedstock 50
6.1.1 Feedstock quantity 50
6.1.2 Feedstock quality 50
6.1.3 Gate fees 51
6.2 Applicable technologies 51
6.3 Permitting 51
6.4 Energy contracts 52
6.5 Financing 52
6.6 Project implementation 52
6.7 Commissioning 53
7. Biogas upgrading Barriers 53
7.1 Natural gas standards 53
7.1.1 Terasen Gas standards 54
7.2 Regulatory barriers 54
7.3 Political barriers 55
7.4 Commercial barriers 55
8. Potential of biomethane in the Fraser Valley 56
9. Conclusion 60
References 61

List of Figures

Figure 1 - Non regenerative water wash 10
Figure 2 - Regenerative water wash [1] 11
Figure 3 - Selexol chemisorption process 11
Figure 4 - PSA unit 12
Figure 5 - Membrane system 14
Figure 6 - Simple biomethane injection and monitoring system 17
Figure 7 - Complex biomethane injection and monitoring system 18
Figure 8 - Monitoring scheme for a biomethane plant in Michigan 19
Figure 9 - Cost of biomethane upgrading 24
Figure 10 - No gate fee scenario biomethane cost breakdown 26
Figure 11 - Case study farm 33
Figure 12 - Case farm eastern site 34
Figure 13 - Case farm process flowchart 37
Figure 14 - Farm with scaled anaerobic digester plant 38
Figure 15 - Biomethane upgrading and injection scheme 42
Figure 16 - Influence of gate fees on biomethane pricing 46
Figure 17 - Biomethane vs. natural gas comparison 57
Figure 18 - Retail energy cost of various fuels in BC 58

List of Tables

Table 1 - Max. H_2S concentration in biogas for various applications 3
Table 2 - Max. sulphur concentration for grid injected RNG 4
Table 3 - H_2S removal comparison chart 4
Table 4 - Maximum moisture content in RNG for grid injection 6
Table 5 - Maximum concentration of oxygen in RNG for grid injection 8
Table 6 - Max. concentration of CO_2 in biomethane for grid injection 8
Table 7 - Biogas upgrading comparison chart 14
Table 8 - Minimum energy content in biomethane for grid injection 15
Table 9 - Raw biogas production cost 21
Table 10 - Average cost of biogas upgrading (240 nm3/h) 23
Table 11 - Energy costs for pressurizing biomethane to 500PSI 25
Table 12 - Boiler emission factors 28
Table 13 - Emission Factors for biogas flaring 29
Table 14 - Catalytic off-gas combustion 29
Table 15 - Vehicle emissions per fuel 30
Table 16 - GHG emissions per km driver 32
Table 17 - Case farm study energy potential 36
Table 18 - Project cash flow with gate fees and biomethane sold at $10.70/GJ 45
Table 19 - Biogas upgrading emissions 48
Table 20 - Nutrient impact estimation 49
Table 21 - Minimum gas quality at Terasen Gas receipt points 54
Table 22 - Price of various fuels 56
Table 23 - Cost of energy delivered to vehicle wheels for various fuels 59

1. Introduction

Anaerobic digestion is the process of converting organic waste into biogas energy. Biogas is primarily composed of methane (CH_4) and is typically used in boilers and electric generators to generate heat and power.

Biogas can also be refined into biomethane or renewable natural gas (RNG) for injection into natural gas networks.

The current study focuses on the technical and economical viability of upgrading anaerobic digestion biogas to a natural gas standard for injection into the existing natural gas network and its subsequent sale in existing gas markets. A thorough case study analysis (assuming worst-case scenario i.e. no gate fees) is performed to estimate a biomethane production price range and assess its competitiveness vis-à-vis natural gas.

This study follows a feasibility study[3] performed in 2007 for BC Bioproducts Association to assess the technical and economic viability of producing biogas energy from waste in the Fraser Valley using anaerobic digestion technologies. The previous study estimated that the equivalent of 65 million cubic meters of natural gas per year could be readily produced as biogas, and over 120 million cubic meters of natural gas per year could be produced using all available organic waste generated in the Fraser Valley. The previous study also concluded that the current electricity market (inexpensive green hydroelectricity) does not provide a fertile ground for production of electricity from biogas.

The current study attempts to measure the potential for alternative use of biogas energy in the BC lower mainland.

1.1 About biomethane

Biogas typically refers to a gas produced by the biological breakdown of organic matter in absence of oxygen. Biogas is composed primarily of methane (CH_4), carbon dioxide (CO_2) and various other gases. The typical composition of anaerobic digestion raw biogas is:

Methane	CH_4	50%-80%
Carbon dioxide	CO_2	20%-50%
Ammonia	NH_3	0-300 PPM
Hydrogen Sulphide	H_2S	50-5000 PPM
Nitrogen	N_2*	1-4%
Oxygen	O_2*	< 1%
Water vapour	H_2O	Saturated 2-5% (mass)

*Only present if air is injected into the digester for H_2S reduction

[3] Feasibility Study – Anaerobic Digester and Gas Processing Facility in the Fraser Valley, British Columbia

Removal of CO_2 and other undesirable gases, which can be achieved using various gas scrubbing technologies, results in a gas composed primarily (97 %+) of CH_4. Since this CH_4 is generated from biomass, it is called biomethane. Biomethane can displace natural gas to reduce GHG emissions; therefore, it is also called Renewable Natural Gas (RNG).

Natural gas is a non-renewable fossil fuel composed primarily of CH_4 (70-98%) and other hydrocarbons (ethane, propane, butane, etc).

1.2 Study challenges

Although the processes of anaerobic digestion, biogas upgrading and injection are well understood, there are relatively few projects in the world that achieve economically viable biomethane commercialization.

Until recently, energy prices and environmental concerns were insufficient to make biomethane production and marketing economical viable.

A large portion of biogas upgrading projects use landfill gases which have economic fundamentals, like capital and operational expenses that are quite different from those of anaerobic digestion.

Comparison of biomethane pricing vis-à-vis highly volatile fossil fuel energy prices may lead to rapidly obsolete observations and conclusions.

Furthermore, several biogas upgrading technologies exist that have different capital and operational expenses. These discrepancies make comparison difficult.

Finally, biogas upgrading projects are located primarily in Europe. A recent appreciation of the Euro currency vis-à-vis the US and Canadian dollars creates significant distortions in trying to cross compare various international projects, technologies and economical factors.

This study attempts to distil the information available in the market and level the playing field by providing a broad view of the technical and economical challenges of biogas upgrading and marketing as a renewable energy alternative to natural gas.

2. Biogas cleaning and upgrading technologies

Various technologies to convert raw biogas into biomethane exist. These technologies, which are often multi-staged, involve cleaning contaminants from the gas and then upgrading it by removing inert gases to concentrate the CH_4 energy density from around 23 MJ/m^3 to $37MJ/m^3$. Appendix A provides a list of reviewed biogas upgrading plants around the world and equipment suppliers.

This fairly technical chapter serves to illustrate the complexity of this task and the various solutions available to a biogas project developer wanting to sell his or her energy as biomethane.

2.1 Biogas cleaning

In this study, gas cleaning refers to the removal of contaminants present in raw biogas. These contaminants may be corrosive, polluting, toxic or acting as clogging agents to the biogas upgrading processes. In this section, typical contaminants are listed and removal processes are described.

2.1.1 Hydrogen sulphide (H_2S)

Hydrogen sulphide, which is present in biogas, is derived from organic material containing sulphur. Therefore, concentrations of this toxic and corrosive gas vary greatly with feedstock type. Hydrogen sulphide in biogas must be reduced to levels where it does not harm any downstream processes. The following table outlines the typical tolerance of H_2S levels for different biogas utilisation equipment.

Table 1 - Max. H_2S concentration in biogas for various applications

Application	Maximum H_2S concentration
Boiler	1000 ppm
Electrical generator (CHP)	500 ppm
Vehicle fuel	23 ppm[1]
Grid injection	4 ppm
Fuel cell	1 ppm

Source: [11], [22]
[1]Swedish standard: 23 ppm total sulphur, including sulphur components from odourization.

Various countries, jurisdictions and utilities have different tolerance for H_2S in their gas networks. Hydrogen sulphide concerns revolve around safety issues such as human toxicity and its corrosive effect on the network (potential leaks). The table below outlines various H_2S tolerance levels in different locations.

Table 2 - Max. sulphur concentration for grid injected RNG

Location	Maximum sulphur concentration
Switzerland	3.6ppm H_2S
France	100 mg/nm^3 total sulphur
Sweden	23 mg/nm^3 total sulphur
Germany	30 mg/nm^3 total sulphur
British-Columbia	4.3ppm H_2S
Michigan	4.1ppm H_2S

Source: [13], [16], [22]

Various technologies can remove hydrogen sulphide from the gas stream. Each technology has pros and cons. Additionally, two or more processes can be combined to achieve higher H_2S removal. These technologies include:

Table 3 - H_2S removal comparison chart

	Efficiency	Capital Cost	Operational Cost	Complexity
Biological fixation	Medium	Medium	Low	Medium
Iron chloride dosing	Medium	Low	Medium	Low
Water scrubbing	High	High	Medium	High
Activated Carbon	High	High	Medium	Medium
Iron Hydroxide or Oxide	High	Medium	Medium	Medium
Sodium Hydroxide	High	Medium	High	Medium

Biological Fixation

Biological fixation of H_2S by sulphur oxidizing bacteria can be promoted in digester tanks or in separate biological scrubbing towers by injecting 2% to 6% of air into the biogas [11]. In this process, bacteria that convert hydrogen sulphide to elemental sulphur will grow on digester walls, on the liquid surface or in the biological filter media. This approach is able to reduce H_2S concentration to less than 50ppm, and also reduces ammonia content in the biogas. This method is commonly implemented in digester biogas storage tanks by linking a H_2S sensor to a blower which injects the amount of air needed for supplying the bacteria responsible for fixation with oxygen.

This method, however, has the inconvenience of introducing nitrogen into the biogas (generally 4%). Nitrogen is an inert gas that is very difficult to remove from the biogas during upgrading.

The sulphur ends up as elementary sulphur in the digestate, augmenting fertilizing values of the digestate. Care must be taken with continuous regeneration processes since too much air in the gas mixture creates an explosive mix. The efficiency of biological desulphurization depends on the time allowed for oxygen to react and on availability of media for bacteria to grow on [1]. The oxygen content in the biogas after desulphurization will be about 0.5 – 1.8 % per volume and the H_2S content will be 60 – 200 ppm [1].

Iron Chloride Dosing
Iron chloride is a liquid that can be added to feedstock to diminish H_2S production. It is injected directly into the digester by using an automatic dosing unit. This method is particularly effective at reducing very high levels of H_2S to a medium level [11]. The system is relatively simple but operational costs are an important consideration since iron chloride sells at a premium. Seldom used by itself, this method can reliably reduce the H_2S load on other removal components down the line. The sulphur ends up in the digestate solution.

Digesters running on protein rich feedstock, like slaughterhouse waste, often use this technique. In Sweden [1] plants use an average of four g/litre feedstock of ferric chloride and, thus, keep H_2S levels below 100ppm.

Water Scrubbing
Since H_2S is water soluble, it can be removed by feeding the biogas through a counter flow of water. While this method can be used in combined with water scrubbing for CO_2 removal, high concentrations of H_2S may plug the water pipes with elemental sulphur. Therefore, this process is usually performed separately to avoid contamination of pipes and packing. H_2S levels at the output of a CO_2 stripping column can be expected to be below 1 ppm [1].

Impregnated Activated Carbon
Activated carbon impregnated with potassium iodine or sulphuric acid is often used to remove H_2S prior to upgrading. This process involves injecting air into the biogas to allow for the carbon to adsorb the H_2S. The carbon can be regenerated by exposure to air. Sulphur ends up in an elementary form. Dry elemental sulphur can be cumbersome to handle because it is combustible. Since H_2S removal is done under wet conditions, this is usually not a concern.

Iron Hydroxide or Oxide
Biogas is passed through a media composed of wood chips and iron oxide or hydroxide. H_2S reacts with the iron oxide or hydroxide to form iron sulphide. The media can be changed or regenerated by oxidation with air. Material impregnated with iron oxide or hydroxide can include steel wool (rust coated), wood chips or pellets of red mud (from aluminium production). This process is highly exothermic and sulphur ends up in an elementary wet form.

Sodium Hydroxide
Biogas bubbled in a sodium hydroxide (NaOH) solution forms sodium sulphide or sodium hydrogen sulphide. Regeneration is not possible. This process possesses a higher absorption capacity than water so smaller volumes are needed. However, disposal of water contaminated with sodium sulphide may be problematic. NaOH also absorbs CO_2 to form sodium carbonate. In a CO_2 rich gas such as biogas, this leads to high operational cost as CO_2 contamination of the NaOH solution necessitates more frequent changes of the solution.

2.1.2 Water vapour

Biogas from anaerobic digestion is commonly saturated with water. Some upgrading processes require relatively dry gas, so drying is often necessary. Others (such as those that use water) add water vapour to non-saturated biogas. Biogas has to be dry prior to grid injection.

Water vapour is problematic as it may condense into water or ice when passing from high to lower pressure systems. This may result in corrosion and the pressure regulator clogging in the distribution system.

Various biogas utilisation systems have various water vapour tolerances. While not usually an issue in boilers and CHP, water vapour can be highly problematic in grid injection or vehicle fuel applications. The table below shows various standards for water vapour tolerance in the gas grid.

Table 4 - Maximum moisture content in RNG for grid injection

Location	Maximum moisture content
Switzerland	60% moisture
France	-5ºC dew point
Sweden	Dew point = ambient temperature - 5ºC, max 32mg/nm^3
Germany	Dew point below ambient temperature
British-Columbia	65 mg/nm^3
Michigan	No condensation

Source: [13], [16], [22]

There are different ways to reduce water vapour in the biogas. These include:

Refrigeration
Heat exchangers are used for cooling the biogas to a desired dew point where water vapour condenses. Biogas can be pressurized to achieve further dryness. Condensate is removed and disposed of as wastewater is recycled back to the digester

Absorption
Glycol or hygroscopic salts absorb water. The medium is regenerated by drying it at high temperature. .

Adsorption
Adsorption drying agents are used to capture moisture. The use of drying agents such as silica gel or aluminium oxide can ensure moisture levels low enough for vehicle fuel specifications (-40ºC at 4bar). Two vessels are packed with media: one is regenerated while the other is actively used for drying. Drying is preferably done at high pressure (otherwise air needs to be injected for regeneration).

2.1.3 Ammonia

Combustion of ammonia (NH_3) leads to formation of nitrogen oxides. Gas engines can usually accept a maximum of 100mg/nm^3. Only Sweden has a standard for ammonia content in biomethane for grid injection: 20mg/nm^3. According to Swedish experts, there is virtually no NH_3 in biogas, and it has never been a problem as it usually stays below 1ppm [1].

Furthermore, because $NH_3$is water soluble, it is also removed with the condensed water and water scrubbing technologies (described below). Therefore, it is not necessary to specifically remove it from the biogas.

2.1.4 Particles

Some dust and oil particles from compressors may be present in the gas, which has to be filtered at 2 to 5µm [16]. These filters are made of paper or fabric.

2.1.5 Siloxanes

Siloxanes can be found in cosmetics, deodorants, food additives and soaps. They are mainly found in landfill gas and Waste Water Treatment Plant (WWTP) biogas; thus, this is not an issue in agricultural biogas. Siloxanes deposits on pistons and cylinder heads are abrasive and can reduce engine life drastically. Although expensive, activated carbon and absorption in a liquid mixture of hydrocarbons can be used to remove siloxanes. Cooling the gas and removing water is another option, but this is not very efficient. A 99% removal can be achieved by cooling the gas to a temperature of -70 degrees Celsius [16].

2.1.6 Halogenated hydrocarbons

Halogenated hydrocarbons and higher hydrocarbons are present in biogas from landfills but rarely in biogas from WWTP and organic wastes. Halogens are corrosive and can lead to formation of dioxins and furans. Activated carbon can also remove them.

2.1.7 Oxygen

Oxygen is a common biogas contaminant in landfill gas. However, it is not found at high concentrations in biogas from anaerobic digestion. Biological fixation to reduce H_2S uses air injection, and, therefore, introduces oxygen into the biogas. However, most of the oxygen is used by the biological process leaving only traces behind. Oxygen can be partially removed by membrane separation and low pressure PSA. The following table outlines tolerance level for oxygen in various gas networks.

Table 5 - Maximum concentration of oxygen in RNG for grid injection

Location	Maximum concentration O_2
Switzerland	0.5%
France	0.01%
Sweden	1%
Germany	3%
British-Columbia	0.2%
Michigan	3%

Source: [13], [16], [22]

2.1.8 Nitrogen

Difficult-to-remove biogas from landfills contains high proportions of nitrogen. Since it is inert, the only impact of nitrogen is the dilution of the energy content. Unless H_2S abatement requires air injection (a 4% injection of air would result in 3.1%, nitrogen), nitrogen should be absent from farm biogas. PSA and cryogenic systems can remove nitrogen, but they are generally prohibitively expensive.

2.2 Biogas upgrading technologies

Upgrading refers to the removal of inert compounds such as CO_2 and nitrogen (N_2) to enhance the energy content of biomethane. The table below lists tolerance level for CO_2 in gas networks.

Table 6 - Max. concentration of CO_2 in biomethane for grid injection

Location	Maximum concentration CO_2
Switzerland	6%
France	2%
Germany	6%
British-Columbia	2%
Sweden	5% (CO_2+O_2+N_2)
Michigan	2%

Source: [13], [16], [22]

The following technologies describe how CO_2 can be effectively removed. Because processes for the same technology may vary greatly between suppliers, accurate efficiencies, process conditions and other parameters can not always be stated.

2.2.1 Water wash

During this process CO_2 is dissolved into water at high pressure analogous to CO_2 in a can of soda. This is the most common biogas upgrading technology in Sweden, and it is often referred to as absorption with water or water scrubbing.

Biogas enters at the bottom of a high pressure water column containing packing in order to enhance contact between the gas and the water. Since CO_2 is more soluble in water than CH_4, the counter flow of water dissolves the CO_2, and biomethane escapes through the top. Water containing mainly dissolved CH_4 and CO_2 is then brought to a flash tank where pressure is reduced, CH_4 departs and the water is re-circulated.

In a non-regenerative process, CO_2 exits the system with the wastewater. This wastewater will not only emit CO_2 to the atmosphere but may also emit CH_4 and H_2S (See Figure 1 - Non regenerative water wash). It is important to note that non-regenerative water wash is primarily used with biogas from WWTP because they have access to large supplies of water and wastewater treatment capacity on site.

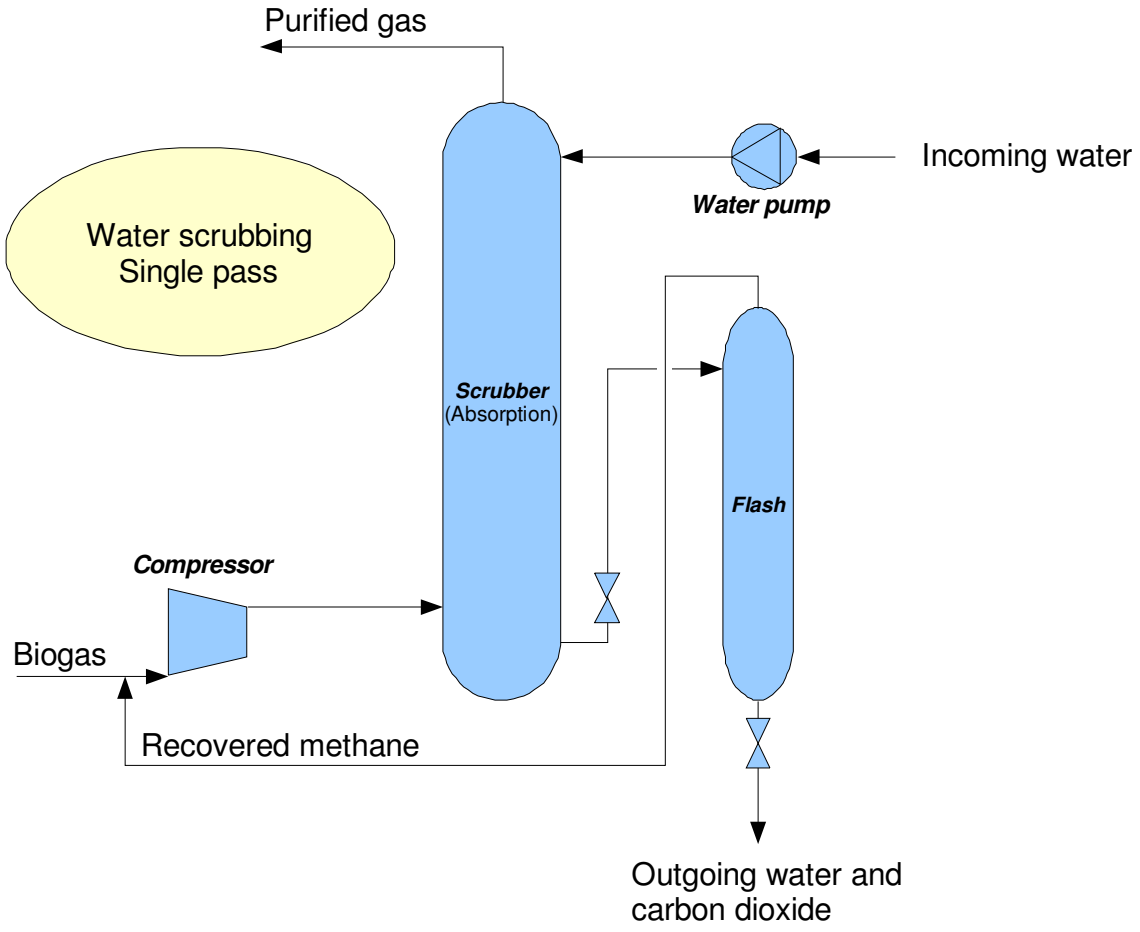

Figure 1 - Non regenerative water wash
Source: [1]

In a regenerative process, CO_2 stays dissolved in the water, and it is released into the atmosphere in a desorption vessel with an air flow in the water. However, the desorption vessel also allows a portion of dissolved CH_4 to escape. A vacuum can be used to help air stripping. Furthermore, in a regenerative process, water is cooled (CO_2 is more soluble in cold water) and brought back to the absorption column (See Figure 2 - Regenerative water wash).

As discussed previously, H_2S will also dissolve in water. However, it is best to remove this beforehand since it may clog pipes in the regenerative systems and produce sulphur air emissions. Air stripping of water to remove H_2S can be done, but it introduces oxygen into the water [16]. Water can also be flushed and not regenerated, but this approach may be costly and create environmental concerns. Some systems do offer solutions to deal with high levels of H_2S (>50ppm). These systems require chemicals to be added in small quantities to reduce the surface tension of water as H_2S can increases this tension and, thus, affect the efficiency of the absorption and desorption columns. The cleaned gas output of water wash columns typically contains less than 1ppm of H_2S [1].

WWTP can use treated wastewater to dissolve CO_2, but this can cause problems in pipes and vessels due to bacterial growth. In these cases cleaning is necessary. Cleaning may have to be performed several times a year by washing the column with detergent or removing the media and cleaning it externally. When using a non-regenerative process, it can be performed without stopping the biogas flow.

Water wash adds water to the biogas, increasing drying costs. Plugging of the packing can also be caused by oil leakage from compressors. To prevent odours and residual H_2S in the vent gas from the desorption vessel, a bio-filter can be installed.

Energy use in this process is estimated at around 0.3kWh/nm^3 cleaned gas [15]. CH_4 losses are typically 1.5%. In non-regenerating process, water use is approximately 150 litres per standard cubic meter of raw biogas [14]. A hundred times less water can be consumed by a plant reusing its water, although this depends on several factors of which H_2S concentration is the most important.

The amount of water used also depends on the temperature and pressure of the process as water absorbs more CO_2 at lower temperatures and elevated pressures. Used water will require proper treatment prior to discharge into the environment.

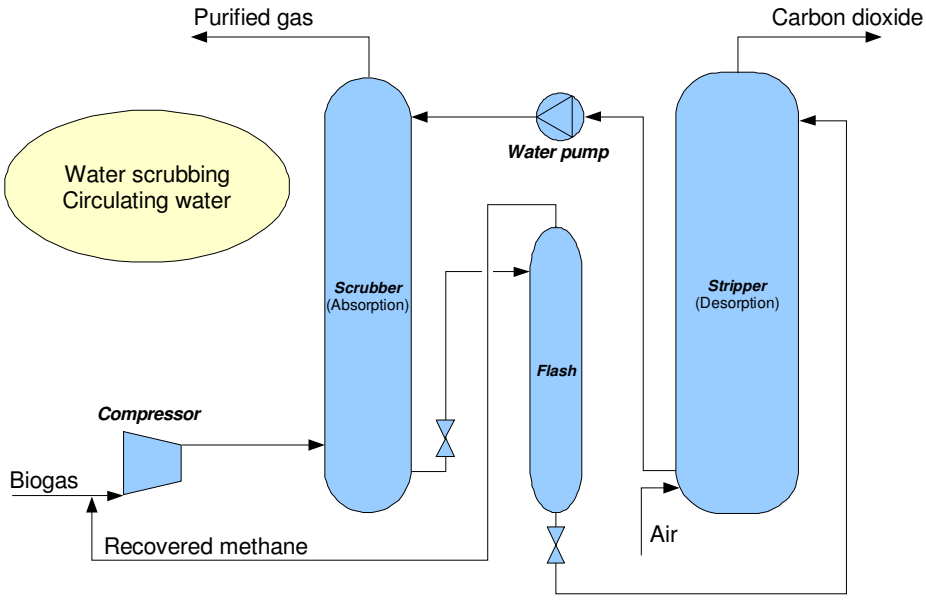

Figure 2 - Regenerative water wash [1]

2.2.2 Chemisorption and physisorption

Instead of water, organic solvents can be used to absorb CO_2. Solvents come in different forms and brands, including polyethylene glycol, Selexol®, Genosorb®. Smaller plant can be built because solubility of CO_2 is higher in these liquids. H_2S is highly soluble in Selexol, and a high temperature process is required to regenerate the solvent.

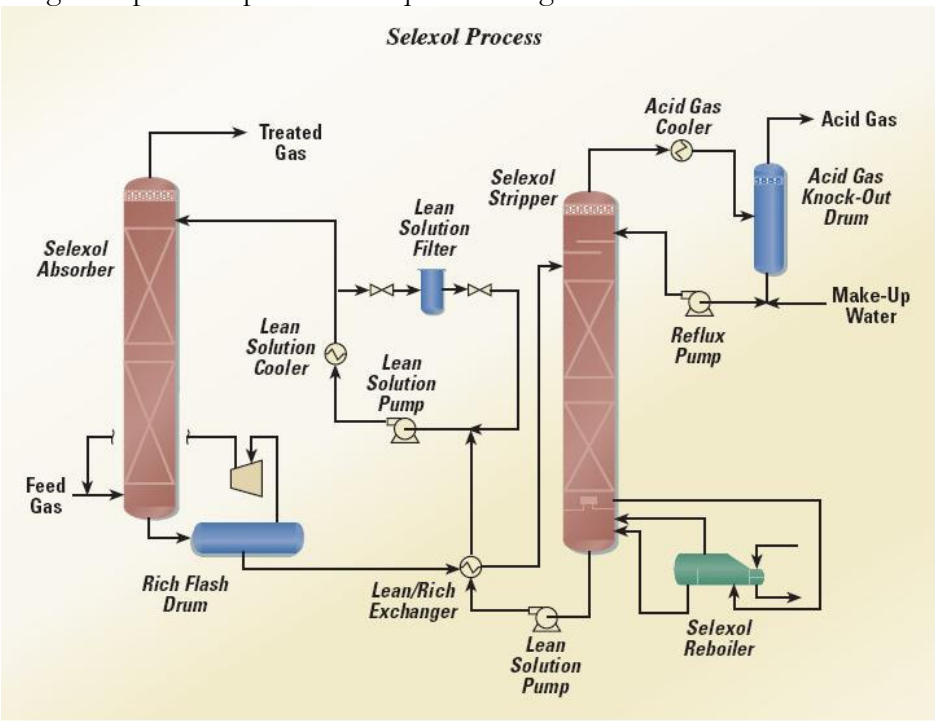

Figure 3 - Selexol chemisorption process

Similarly to water wash, these processes require high pressure for CO_2 adsorption. Stripping is performed by depressurizing the CO_2 laden liquid and methane is lost [14]. Water vapour from the biogas may contaminate the chemical, reducing its efficiency; the chemical then has to be heated to 105°C to boil off the water.

Similarly to solvents, mono-ethanol amine or di-methyl ethanol amine can be used to dissolve CO_2 by a chemical reaction followed by regeneration using vacuum or heat (steam) treatment. These chemicals are highly CO_2 selective, and result in almost no loss of CH_4 [14]. CH_4 output can be as high as 99% [14]. However, these products are toxic to humans and the environment. Furthermore, these processes require significant energy consumption for regeneration and water from the gas may contaminate the chemical, reducing its efficiency.

2.2.3 Pressure swing adsorption

Also called carbon molecular sieves, pressure swing adsorption (PSA) is the second most commonly used biogas upgrading technology in Sweden.

Figure 4 - PSA unit

At high pressures, selected molecules are trapped in an adsorbent medium and then released at low pressures. Biogas is passed through zeolites (crystalline polymers), carbon molecular sieves or activated carbon as pressure builds up. Depending on the adsorbent and operating pressure used, CO_2, O_2 and N_2 can be adsorbed. Liquid water and hydrogen sulphide are contaminants for this process and must be removed beforehand.

PSA processes typically result in an output of 97% CH_4. This upgrading takes place over 4 phases: pressure build-up, adsorption, depressurization and regeneration. The pressure build-

up is achieved by equilibrating pressure with a vessel that is at depressurization stage. Final pressure build up occurs by injecting raw biogas. During adsorption, CO_2 and/or N_2 and/or O_2 are adsorbed by the media and the gas exits as CH_4. Before media saturation, biogas goes to another ready vessel. Depressurization is performed by equalizing with a second pressurizing vessel, and regeneration is achieved at atmospheric pressure, leaving a gas that contains high concentrations of CH_4 to be re-circulated. A vacuum is then applied to the vessel to suck most of the CO_2 out of the media, and exhaust it into the atmosphere. This exhaust still contains considerable CH_4, and can sometimes be burned. A new cycle can then begin with admission of new gas to be upgraded.

New PSA processes have been recently developed like the rapid PSA process. This allows for quicker treatment of the gas and up to 1/15 the size of unit is needed. Additionally, this technology is said to cost ½ of what conventional PSA technologies costs and require less maintenance[4].

It is possible to burn the exhaust gas in a low-calorie gas burner [16] or a catalytic of gas combustion system, which can reduce atmospheric emissions.

One supplier claims that a PSA plant can operate at 40% of it nominal production capacity[5].

2.2.4 Membrane separation

Selectively permeable membranes can be used to retain CH_4 by using pressure differentials in which the highly solubility CO_2 passes through the membrane to the other side. This method can also be used to remove some H_2S. Typical CH_4 output is 94-96% [6]. The solid membrane process has a gas flow on each side of the membrane and operates at high pressure while liquid membranes processes have an absorbing liquid flowing on the absorbing side of the membrane, flushing the CO_2 and allowing for operation at atmospheric pressure [1]. When high levels of CH_4 are needed in the output stream, there are high CH_4 losses in the permeate stream. A compromise is to recirculate the permeated gas. In this case, the permeated gas can be used in a CHP together with raw biogas or it can be flared [16]. Typical operating pressures are between 16 and 40 atmospheres.

[4] www.psaplants.com
[5] Questair Inc.
[6] Charlie Anderson, Air Liquide

Figure 5 - Membrane system

2.2.5 Cryogenic distillation

At atmospheric pressure, CH_4 condenses at -161.6°C and CO_2 freezes at -78.5°C. This enables separation of the two components in different phases. It is best performed at elevated pressure to ensure that CO_2 condensates into a liquid and not a solid form (dry ice) that would clog the piping system. If CH_4 is condensed, nitrogen can also be removed. However, it is better to remove the H_2S first to avoid clogging of the system. Cryogenic distillation is not yet done on a commercial scale.

2.2.6 Summary of upgrading technologies

The table below shows how upgrading technologies compare to each another.

Table 7 - Biogas upgrading comparison chart

	Water scrubbing	Amine scrubbing	PSA	Membrane
Energy consumption (kWh/m^3 biogas)	0.3	0.67	0.27	N/A
CH_4 recovery	98.5%	99%	83-99%	90%
H_2S co-removal	Yes	Contaminant	Possible	Possible
Liquid H_2O co-removal	Yes	Contaminant	Contaminant	No
H_20 vapour co-removal	No	Yes	Yes	No
N_2 and O_2 co-removal	No	No	Possible	Partial

2.3 Biomethane post treatment

2.3.1 Odourizing

Odourization is necessary for leak detection. Generally, tetrahydrotiophen or ethylene mercaptan is added in small amounts. This can be injected by a simple system based on a wick. A gauge on the odorant tank can be used to indicate amount of odorant used. Alternatively, a sniff test can be performed downstream by creating a leak and using a human or artificial nose. [19]

2.3.2 Energy content

The energy content of biomethane has to be above a specific point determined in the re-sell contract. This can be described either as the CH_4 content, the Wobbe index, the higher heating value (HHV) or the lower heating value (LHV).

The Wobbe index is a measure of energy density used to assess the interchangeability of fuel gases. The higher heating value is defined as the amount of total combustion energy present in a gas, and the lower heating value is the amount of useable energy in a gas. The latter is the energy released by combustion of the gas not accounting for the energy of water vapour in exhaust gases.

The following table lists minimum energy densities for injection in gas grid systems.

Table 8 - Minimum energy content in biomethane for grid injection

Location	Minimum energy content
Switzerland	96% methane
France	34.2MJ/nm^3 HHV
Sweden	11kWh/nm^3 LHV
Germany	87% methane
British-Columbia	36MJ/nm^3 HHV (95.5% methane)
Michigan	93.5% methane

Source: [13], [16], [22]

When the biomethane does not meet the requirement, propane or liquefied petroleum gas (LPG) can be added to increase its energy content (Figure 7 - Complex biomethane injection and monitoring system). It is interesting to note in Table 7 that the Swedish standard of 11kWh/nm^3 LHV needed as the minimum energy content for natural gas [13] is impossible to reach with 100% CH_4 (its LHV is 9.97kWh/nm^3). Therefore, all biogas upgrading plants performing grid injection in Sweden must add some LPG.

2.3.3 Emissions mitigation

Methane content of exhaust gas from biogas upgrading can range from 0.1% to 22% CH_4, depending on the upgrading technology chosen.

Flaring system

Any anaerobic digester operation must be equipped with a flare in order to burn excess biogas. Exhaust gas can be flared if supplemented with raw biogas to allow for proper combustion; a biogas upgrading plant may be equipped with a low-BTU flaring system to avoid waste of raw biogas.

Boiler or CHP

High BTU exhaust gas can be fed to a boiler or CHP for energy production. Biogas may have to be supplied to enhance the energy content of the gas being burned.

Regenerative and catalytic off-gas combustion system

More stringent bylaws on emission control in Europe have led to a widespread use of catalytic off-gas combustion systems[7]. These technologies enable destruction of exhaust CH_4, typically 0.1% to 4% of the CH_4 produced, to lower than 0.2%. These technologies, which are particularly useful with PSA and water scrubber techniques, need energy to start-up. Once they have reached a certain temperature, they can produce 95% to 98% of their energy needed[8].

2.4 Grid injection and monitoring

In BC, there are three different possible points for injecting biomethane into the gas network. The first is injection into the high pressure pipeline (750 PSI). If carried out here, the biomethane will be highly diluted by natural gas allowing for less stringent biomethane quality control. However, the cost of compressing biomethane to this level may be uneconomical. Transport (midstream) cost may negatively affect final biomethane cost.

Intermediate pipelines (120 PSI) present an interesting injection point since pressure is similar to some biogas upgrading processes. Furthermore, the volume of natural gas is significant to ensure proper dilution of the biomethane and guarantee significant consumption volume even during summer months.

Injection into the distribution network (60 PSI) is the final and most practical solution. However, the gas utility must ensure that the minimal summer load is greater than the biomethane project flow. Furthermore, for security reasons, the utility may require more stringent monitoring of the gas quality since dilution of biomethane will be low.

Injection and monitoring schemes vary considerably between utilities and a case-by-case approach is often adopted. Some authorities and grid owners have made biomethane

[7] often referred to as a Vocsidizer
[8] Megtec

injection more feasible by using simple injection systems while others require a more stringent and complex monitoring scheme. Reasons for grid owners to adopt more costly schemes range from fear of biomethane being off-specification to simple not wanting to co-operate [1]. Factors like trust in biomethane, its dilution factor in the pipeline and location of the upgrading plant on the network will affect the strategy chosen.

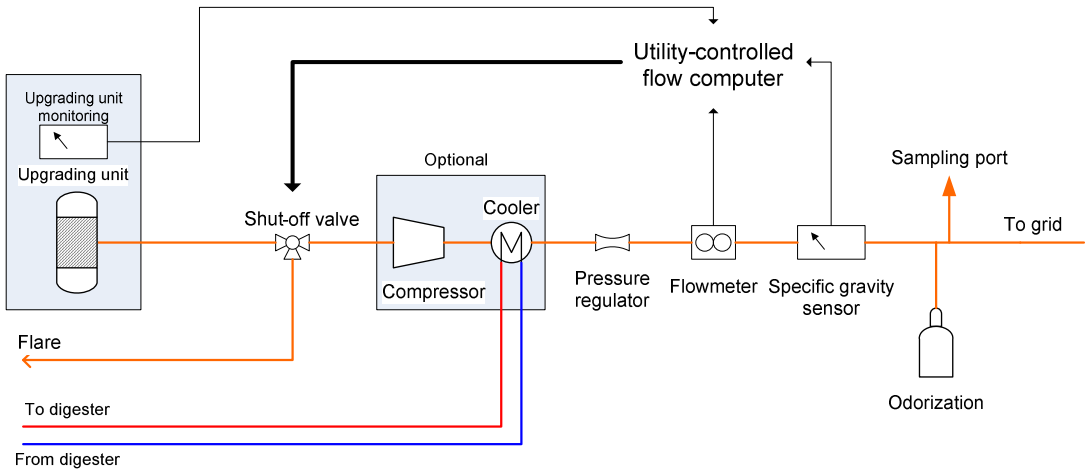

Figure 6 - Simple biomethane injection and monitoring system

A simple monitoring system (shown above) comprises several components and costs $50 000 - $100 000(without compressors) [1],[4]:

- A three way flow valve that can be closed by the plant or the utility if the biomethane does not meet the quality requirements. The biomethane would then be recirculated in the upgrading unit, flared or recycled into the boiler;
- A compressor (a cooler/dewatering unit can be added if higher pressure is needed),
- A pressure regulator to keep the pressure at the level needed for injection,
- A flow meter for billing purposes,
- A specific gravity sensor to detect variations in gas composition (mainly in the proportion of CO_2 to CH_4) and to indicate the gases heating value,
- A flow computer to be operated by the utility, allowing it to shut the valve off if gas quality becomes off-specification. This computer would also record production rates and enable the utility to bring the injection process back to operation by re-opening the three-way valve,
- A downstream odorizing unit, and
- A sampling port for discrete sampling at weekly or monthly intervals (mainly to test for H_2S as well as other contaminants of concern).

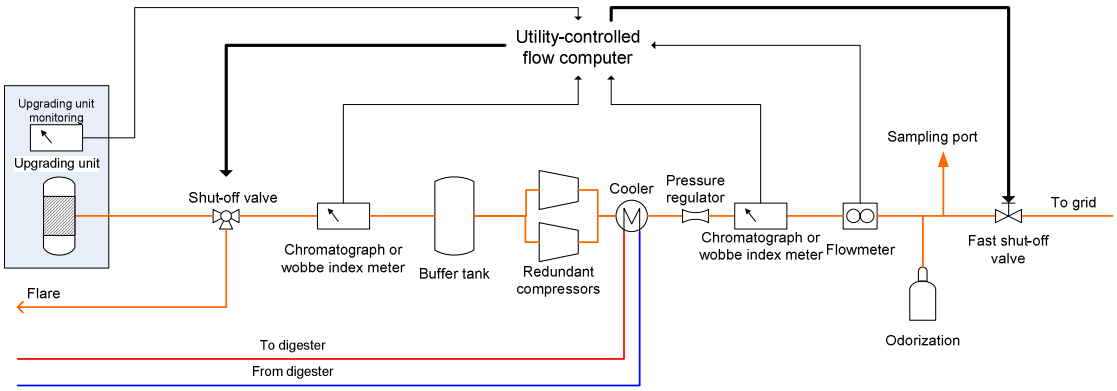

Figure 7 - Complex biomethane injection and monitoring system

A more complex injection and monitoring scheme (similar to the one above) would cost $100 000 - $400 000 and be comprised of additional technology. These include:

- Chromatographs and/or Wobbe index meters to replace the specific gravity meter. This would measure heating value, CH_4, CO_2, O_2, H_2S and dew point every third minute. This appears to be specific to Sweden and Germany;
- An additional chromatograph/Wobbe index meter installed upstream to detect changes before the gas could flow into the grid,
- A buffer tank for the gas to sit before a reading is made by the gas quality equipment (so fast shut-off valve can be closed before any off-spec gas is injected into the grid), and
- A second compressor to ensure that the plant keeps running when maintenance is performed on the main compressor.

Monitoring the quality and quantity of biomethane has to be done by the plant operator. The utility may use the same meters or add its own at the delivery point. The utility may also use remote monitoring as well as human performed readings on data logging equipment.

Technologies such as PSA and amine scrubbing are good candidates for simple injection and monitoring systems since these technologies often provide an additional assurance that gas quality will not become off specification. H_2S, for instance, is a life-shortening contaminant for most PSA adsorbents (raw biogas fed in a PSA plant can rapidly deteriorate adsorbent material). Since the same can apply for water, O_2 and other contaminants, one must design an injection and monitoring unit based on the risks related to the upgrading technology that has been chosen.

The figure below shows a monitoring scheme from a utility's point of view. It is based on a specific gravity sensor, which is owned by the farm but operated by the utility. In this case, the specific gravity sensor and control unit are located in a locked room with access for utility employees only.

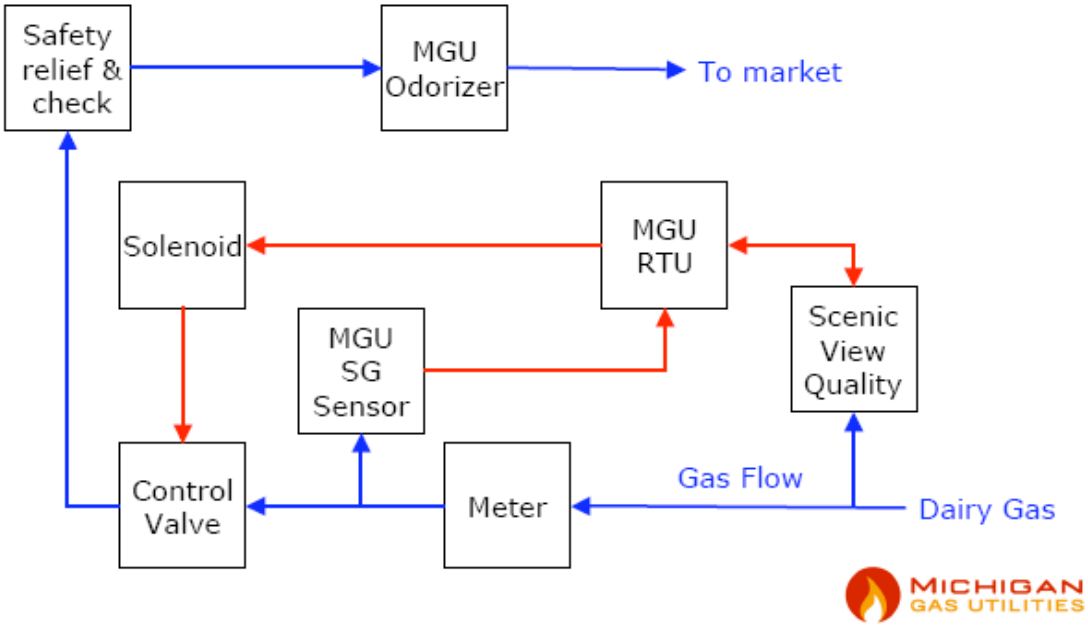

Figure 8 - Monitoring scheme for a biomethane plant in Michigan

3. Biogas upgrading economics

The cost of biomethane production and grid injection at 60 PSI will be assessed and divided in three stages: anaerobic digester biogas production cost, biogas cleaning and upgrading cost, and other potential costs associated with overall biomethane production and injection.

All assumptions were made under worst case scenario (no gate fee) for biomethane production. Additionally, no project grants or alternative revenue were taken into account which could bias the production price.

The data presented below results from interviews with plant operators, equipment quotations from suppliers and literature reviews. Capital and operating costs were converted to a production cost per unit energy using financial assumptions given in Appendix B. Other assumptions concerning costs of material, installation, maintenance, energy use, etc. were made when information was missing.

The numbers given in this chapter are for a farm-based anaerobic digestion plant producing around 240nm^3/h of raw biogas to be upgraded to 140nm^3/h of biomethane. This amount of biogas could power a 500 kW electrical biogas plant and reflects a realistic scenario for a farm based biogas plant accepting food waste in the Fraser Valley. A 240nm^3/h biogas flow is believed to be a minimum flow to justify biogas upgrading and this economical analysis, therefore, presents results for the no-gate-fee scenario (worst-case scenario).

In scenarios where significant gate fees can be derived from accepting off-farm waste, the biogas production cost could be substantially lower and, thus, competitive with natural gas (as illustrated in the case study below).

The analysis does not investigate the possibility for economies of scale at larger flow rates. These economies can be substantial when dealing with volumes approaching 2,000nm^3/h of biogas[9].

Currency exchanges (Euro-CND) were included to reflect the reality of buying systems from European suppliers. All costs are expressed in Canadian dollars.

3.1 Biogas cost

It is important to recognize that the cost of producing raw biogas from farm-based anaerobic digestion is significant due to large infrastructure capital investment. For more details on anaerobic digestion technologies and economics specific to the BC context, see the study by Electrigaz, 2007[8].

A complete mixed anaerobic digestion system would consist of a digester tank(s), a mixing tank, a storage tank, a flaring system, instrumentation, heat exchangers and a boiler for

[9] Charlie Anderson, Air Liquide

heating the digester. A digester running on cow slurry (32,000 m^3/year), and 15.3% off-farm waste (3,600 tonnes/year of grease trap fat and 2,200 tonnes/year of kitchen waste) would yield approximately 240nm^3/h of raw biogas. This translates into an off-farm waste proportion of 15.3%. The biogas production would be 60m^3 of biogas per m^3 of feedstock or 1.7m^3 of biogas per m^3 of digester per day. Such a system would cost approximately $2.2M, or $7.72 per GJ of raw biogas. Appendix C outlines assumptions, details of capital cost and financing cost.

To reflect a worst-case scenario, none of the following potential additional revenue streams, or costs, are included:

- No revenue from gate fees nor expenses related to the treatment of off-farm wastes,
- No carbon credit revenues,
- No savings on bedding, manure application, nutrient management benefits and costs, odour reduction and other environmental attributes benefits, and
- No costs for manure separation and composting, nor revenue from sales of fertilizer.

Table 9 - Raw biogas production cost

Expenses	
Lab Analysis	$3,750
AD plant electricity	$9,800
Insurance	$5,326
General Maintenance	$21,305
Labour	$14,600
Debt service	$267,711
	$322,492
Biogas production cost	$7.72/GJ

It is interesting to note that in the scenario above, where no gate fee revenue is available, raw biogas production costs are approximately the same as undelivered natural gas. Upgrading costs accounts for the difference between renewable and non-renewable natural gas costs.

It is important to point out that biogas generated from landfills and WWTP would have a significantly lower production cost because it is considered a by-product of an essential process.

3.2 Biogas upgrading cost

A combination of interviews, quotes and literature reviews of recent and comparable systems were necessary to find an average price for biogas upgrading. To ensure proper comparison of fundamentally different technologies in different jurisdictions and currencies, the cost of upgrading includes:

- Methane extraction efficiency,
- System energy utilisation,
- Capital cost: cleaning, upgrading, monitoring and control, gas conditioning, civil works, engineering, connection to grid, odorizing,
- Operation and maintenance: man-power, energy use, maintenance, chemicals, disposal of chemicals, and
- H_2S scrubbing costs.

The cost for upgrading biogas does not include externalities such as water consumption, air contamination and other potential environmental damages. Because impacts vary greatly between technologies and projects, it would be arduous to attribute a monetary value to these costs. Nevertheless, one must bear in mind these effects when considering the economical success of biogas upgrading plants. Details on derivation of biogas upgrading costs are given in Appendix B.

The table below shows an average biogas upgrading cost based of existing projects, current equipment quotes and literature reviews.

Table 10 - Average cost of biogas upgrading (240 nm3/h)

Project	Biogas Flow(m^3/h)	Year	Cost($/GJ)	Type	Technology
Uppsala	200	2000	5.52	plant	Water wash
Scenic view	280	2007	4.84	plant	RPSA
Bromma	800	2001	3.97	plant	PSA
King County wwtp	1429	1987	5.04	plant	Water wash
NSR Helsingborg Wrams	650	2008	4.57	plant	Water wash
Gunnarstorp	500	2006	5.20	plant	PSA
Helsingborg WWTP	250	2008	6.12	plant	Water wash
Kalmar	200	2008	7.25	plant	Chemisorption
SGC142	240	2003	6.95	study	Any
Biomil	240	2008	7.32	study	Any
Metener	200	2006	5.90	supplier	Water wash
Molecular Gate	240	2008	6.72	supplier	PSA
Carbotech	250	2008	10.18	supplier	PSA
QuestAir 1 stage	240	2008	6.38	supplier	RPSA
QuestAir 2 stages	240	2008	7.15	supplier	RPSA
	Average biogas upgrading cost		$6.21/GJ		
	Average cost below 400m^3/h		$6.76/GJ		

The average biomethane upgrading cost of $6.76/GJ was derived from plants with a biogas flow rate between 200nm^3/h and 400nm^3/h with an H_2S level of 1500-2500 ppm and a simple nearby grid connection (no gas chromatograph).

It is interesting to note that a significant fraction (>20%) of project cost is related to specific engineering fees. As this industry progresses and technologies become more packaged and streamlined, there is potential for these costs to decrease, thus, reduce upgrading cost. The Scenic View project is a good example of a technology provider with engineering capability who wanted to reduce engineering fees to build a reference/demonstration plant that delivers biogas upgrading at a very competitive price.

The graphic below shows that for low volume biogas upgrading, various technologies have a cost clustering between $5.5/GJ to $7.5/GJ.

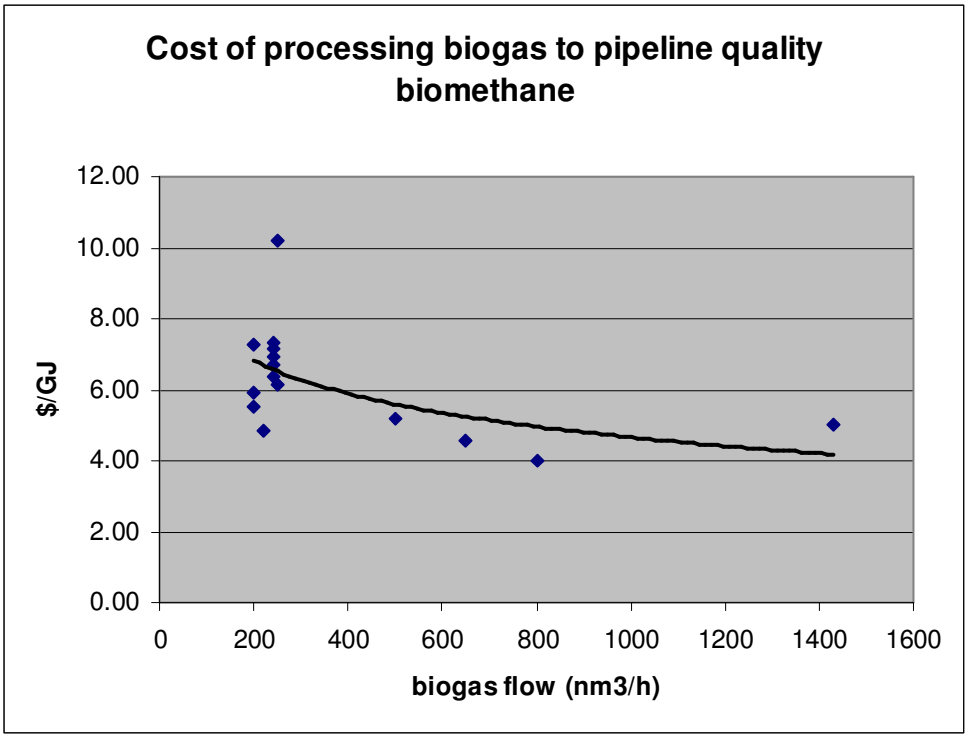

Figure 9 - Cost of biomethane upgrading

This graph also shows that economy of scale can be expected.

Due to feedstock availability, geographical and regulatory limitations, development of farm-based digesters with biogas flow rates above 400nm^3/h are improbable in BC. This compromises any economy of scale that could be derived.

It is interesting to note that most of the information provided came from Europe and that the strength of the Euro and the demand for these technologies are driving average prices up. As this sector develops in Canada it is probable that solutions will be offered at lower costs.

It is clear that landfill and WWTP biogas projects with large volume of gas (>1000 nm3) could bring biomethane to market at a fraction of the cost of farm-based anaerobic digestion projects.

3.3 Other cost

3.3.1 Waste stream mitigation

Depending of local air quality and emissions regulations, disposal of exhaust from the upgrading unit could present significant additional cost.

When the exhaust gas contains more than 10% CH_4, it is possible to use it in a boiler, a CHP or flare it. When it is below 10%, a regenerative or catalytic off-gas combustion system can be purchased for a capital cost of $330,000 [1]. Energy rich exhaust gases may prove beneficial as they are readily combusted with conventional flares and/or boilers and may be used as fuel for digester heating.

Wastewater disposal from water wash technologies can also generate operational cost. However, it is common practice that this water be recycled through a WWTP or via the digester.

3.3.2 Gas grid connection

Excavation and pipeline installation of a 400 meter long underground pipeline suitable for a for 240m3/h flow rate would cost approximately $90,000 [18]. A simple grid connection with flow meters, valves, odourizer, specific gravity meter and short piping to the network was estimated at $60,000 (See Figure 6 – Simple biomethane injection system).

A more complex system involving propane injection and gas chromatographs would cost between $100,000 and $400 000 and would not be practical or applicable for a farm-based anaerobic digestion project.

3.4 Pressurizing cost

Insertion of biomethane in transmission pipelines requires further compression, which can add a considerable cost to biomethane connection/delivery costs.

The table below shows energy needed to compress upgraded biogas to pipeline pressure (500PSI or 33 bar(g)). This does not include capital and operating expenses of the compression equipment.

Table 11 - Energy costs for pressurizing biomethane to 500PSI

Upgrading technique	Pressure from upgrading unit	Pressure after compressors	Electricity consumption [kWh/Nm3]	Compression cost at $0.07/kWh ($/GJ)
Amine Wash (COOAB)	150 mbar(g)	33 bar(g)	0.24	0.47
PSA	4 bar(g)	33 bar(g)	0.12	0.23
Water scrubber	10 bar(g)	33 bar(g)	0.063	0.12

Source: Biomil AB [1]

In the case where biomethane is used as vehicle fuel (3600 PSI), the compression costs from 60 PSI to 3600 PSI is approximately 0.3kWh/nm3 of biomethane or 3% of the energy content of the upgraded biogas [14]. This translates to $0.58/GJ at a $0.07/kWh electricity cost.

3.5 Total biomethane production cost

For on-farm anaerobic digester with a biogas flow rate of 240 nm3/h and simple injection into a nearby local distribution network, the production cost of the biomethane would break down to $7.72/GJ for the biogas and $6.76/GJ for the upgrading. This gives a total cost of approximately $14.48/GJ. This price is the production cost and does not include profit for the project developer.

It is estimated that biomethane produced from profitable a low flow rate on-farm anaerobic digesters could not be sold for less than $15/GJ. This is significantly higher than the cost of conventional fossil fuel natural gas, which has a commodity charge of $8.29/GJ.

However, anaerobic digestion can generate other revenues such as gate fees, fertilizer resell and carbon credits that can subsidize production costs and allow for marketing of biomethane at a more competitive price.

The figure below provides a cost breakdown of biomethane in comparison to natural gas commodity pricing.

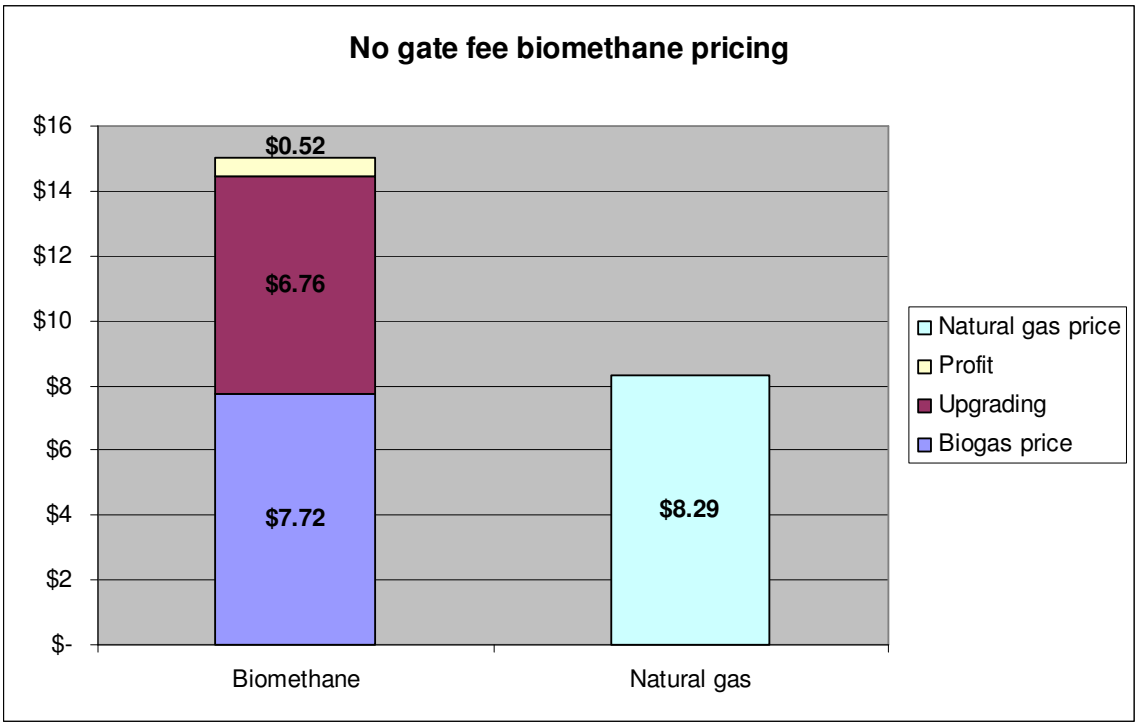

Figure 10 - No gate fee scenario biomethane cost breakdown

Note that this comparison is for commodity charge only and does not include transportation (midstream), taxes or delivery cost that would be charged by Terasen to distribute either gas.

4. Environmental impact

Biomethane production can have positive impacts on air and water quality, as well as help reduce GHG emissions.

This chapter focuses solely on the environmental impact of biogas cleaning and upgrading technologies. Anaerobic digestion impacts will not be revisited since they were treated in a previous study [8].

4.1 Air quality

Air quality issues vis-à-vis biogas upgrading are primarily related to mitigation of exhaust gas from the biogas upgrading process. Gas cleaning techniques do not have a gaseous exhaust; hence, they do not present a threat to air quality.

4.1.1 Odours

Functioning anaerobic digesters, biogas cleaning and upgrading equipments are gas-tight systems that do not emit odour.

Odours may emerge for reception of off-farm waste. This can be mitigated with negative pressure receiving halls, gas-tight receiving tanks and forced air biofilters.

Combustion of biogas or exhaust gas containing H_2S in a flare or a boiler will result in SO_2 odour emissions. However, this is unlikely to create problems since most of H_2S abatement is done in the gas cleaning phase and results in conversion of H_2S into elementary sulphur.

Digestate storage and spreading will generate less H_2S and ammonia odours than raw manure [4].

4.1.2 Gaseous emissions

Upgrading technologies generally yield an exhaust gas that only consists of CO_2 and CH_4, assuming proper cleaning (H_2S removal) has been performed. CH_4 concentrations of the exhaust range from 0.2% to 22%, and total CH_4 losses range from 0.1% to 17%.

Some technologies that remove CO_2 and H_2S at the same time pose a risk of H_2S emissions, and each vendor provides different emission rates for this contaminant. In a normally operating biomethane plant, H_2S emissions should not be an issue since H_2S would be converted into elementary sulphur in the biogas cleaning system or combusted into SO_2.

Therefore, it is important to assess the possibility for H_2S emissions on a case-by-case basis. Mitigating H_2S emissions from the exhaust stream can be done by using an H_2S scrubber or by burning the gas even though this generates SO_2, which is another atmospheric pollutant.

There are two general techniques to handle biogas upgrading exhaust gases: destruction and recycling.

Exhaust gas may be recycled into a boiler or a CHP by mixing the exhaust gases with incoming biogas stream. For emission factors related to CHP and boiler operations refer to the previous study [8].

Destruction of exhaust gas is achieved by combustion through flaring, in a boiler or in a regenerative or catalytic off-gas combustion system.

Any flaring or combustion of biogas or exhaust gas will have to meet *BC Ambient Air Quality Objectives*. However, farm-based projects may be exempted due to low volume and considered normal farm practice .

4.1.3 Boiler

An upgrading plant and its compressors will typically not generate enough heat to supply thermal energy for digester heating; therefore, a boiler is necessary. Exhaust gases from the upgrading systems can be sent to the boiler, usually mixed with raw or cleaned biogas, to maximize CH_4 energy recovery and provide exhaust recycling.

Proper combustion of sour biogas (200ppm of H_2S) in boilers will result in the following emission factors:

Table 12 - Boiler emission factors

Substance	Emission Factors [10]	Units
Ammonia	2.2	g/GJ
CO	58.6	g/GJ
NOx	69.8	g/GJ
PM primary	5.3	g/GJ
PM10 primary	5.3	g/GJ
PM2.5 primary	5.3	g/GJ
SOx	19.2	g/GJ
TOC	7.7	g/GJ
VOC	3.8	g/GJ

Note that the emission factor (g/GJ) is only for the energy combusted (by boiler or flare) and not for the energy produced by the entire project.

[10] Natural gas combustion calculator, NPRI Toolbox, Env. Canada based on AP-42 US EPA Clean Air Criteria emission factors are from the US EPA's WebFIRE (version December 2005) database. http://www.ec.gc.ca/pdb/npri/documents/2004ToolBox/toolBox_e.cfm

4.1.4 Flaring system

Assuming biogas with negligible levels of ammonia and an H_2S level of approximately 200ppm, proper flaring of this biogas would result in the following emission factors:

Table 13 - Emission Factors for biogas flaring

Substance	Emission Factors [11]	Units
Carbon Monoxide (CO)	2.4	g/GJ
Sulphur Dioxide (SO2)	23.3	g/GJ
Oxides of Nitrogen, expressed as NO_2 (NOx)	19.7	g/GJ
Total Particulate Matter (TPM)***	36.9	g/GJ
Particulate Matter less than or equal to 10 microns (PM10)	36.9	g/GJ
Particulate Matter less than or equal to 2.5 microns (PM2.5)	36.9	g/GJ

*** With gas-fired combustion sources most of the particulate matter is less than 2.5 microns in diameter, therefore this emission factor can be used to provide the estimates of PM10 and PM2.5 emissions.

4.1.5 Regenerative and catalytic off-gas combustion system

The general purpose of a regenerative or catalytic off-gas combustion system is to reduce GHG emissions of CH_4 by burning it and converting it to CO_2 , a less potent GHG gas. This can reduce non combusted CH_4 emissions to the atmosphere to below 0.2% of the CH_4 upgraded. The following table illustrates destruction efficiency assuming negligible level of H_2S in the biogas stream.

Table 14 - Catalytic off-gas combustion

	Vocsidizer performance[12]
Methane removal	97-99%
Total carbon	<20mg/nm^3
CO	<50mg/nm^3
NO_x	<5mg/nm^3

[11] Biogas Flare and Sour Gas calculator, NPRI Toolbox, Env. Canada based on AP-42 US EPA Clean Air Criteria emission factors are from the US EPA's WebFIRE (version December 2005) database. http://www.ec.gc.ca/pdb/npri/documents/2004ToolBox/toolBox_e.cfm

[12] Megtec

4.1.6 Non-regenerative water wash

Water scrubbing technologies recover most of the CH_4 in the absorption column as well as a less significant portion in the flash tank. After the flash tank, a desorption column is employed to remove most of the remaining CO_2 and any traces of CH_4. Non-regenerative processes usually do not offer the possibility to recover and oxidize this CH_4 unless a desorption tank and an off-gas combustion system are added. This may raise air quality concerns when H_2S removal is performed by the water-wash process because water leaving the plant can contain H_2S. This H_2S can revert back to a gas, contaminating the atmosphere and presenting a hazard.

Always present in the environment, H_2S can become toxic at concentrations above 10ppm in air[13]. Water coming from a water-wash process without water absorption to remove H_2S can emit significant amounts of H_2S even though no literature currently quantifies it. Care should, therefore, be taken if such a technique is adopted. There are no Canadian guidelines for H_2S emissions mitigation. Some CH_4 can also still be dissolved in the process water, depending on the flash and desorption tanks performance. This can be a concern since it will be released into the atmosphere.

4.1.7 Fuel displacement

Biomethane has the potential to displace fossil fuels such as natural gas and automotive fuels (diesel and gasoline). The replacement of natural gas would have little impact on air quality since biomethane has roughly the same composition as natural gas. Nevertheless, a positive impact on air quality can be achieved by displacing diesel and gasoline, as shown in the table below.

Table 15 - Vehicle emissions per fuel

	Emission Factor[14]	Gasoline	Diesel	CNG (CBM)
CO	g/km	10.9	0.662	6.54
NOx	mg/km	559	507	504
SO2	mg/km	3.5	21.6	3.5
VOC	mg/km	662	166	146
TPM	mg/km	15.8	68.3	3.2
PM10	mg/km	15.5	68.2	3.1
PM2.5	mg/km	7.1	55.6	1.4

Note that CNG and CBM have identical air pollutant factors. However, contrary to CNG, CBM does not emit new carbon in the atmosphere.

[13] WHO Regional Office for Europe, Copenhagen, Denmark, 2000
[14] Transport Canada urban transport calculator : http://www.tc.gc.ca/programs/environment/UTEC/menu-eng.htm

4.2 Water Quality

Water quality issues vis-à-vis biogas upgrading are primarily related to the handling of condensation from the drying process and the disposal of water from water-wash processes.

4.2.1 Non-regenerative water wash

This process can result in significant amounts of dissolved H_2S in water if no desorption column is present. The current Canadian guideline for H_2S levels in drinking water is <0.05mg/l.

4.2.2 Sodium hydroxide H_2S removal

Sodium hydroxide H_2S removal techniques create large amounts of water contaminated with sodium sulphide and sodium hydrogen sulphide. These salts are insoluble and, if not removed from the water stream, can present a threat to water quality [11].

4.2.3 Condensate removal

Whenever biogas or biomethane are dried, water has to be disposed of. This water is usually sent back to the digester where it came from. Condensation removal should, therefore, not present any significant environmental impacts.

4.3 Waste disposal

Disposal of solid H_2S fixation media to landfill does not pose a problem since it is not considered a hazardous waste. Biogas cleaning would generate an average of 35 tonnes/year of solid waste for a 250m3/h biogas flow.

Disposal of amine solution, generated by chemisorption and physisorption, happens approximately every five years. This may pose a threat from spillage. It is difficult to verify how hazardous this chemical is since its composition is not divulgated. Volumes necessary fir disposal generally does not pose problems.

4.4 Greenhouse Gas (GHG) reduction

Biomethane has a direct benefit of physically displacing natural gas (fossil fuel) and has the potential to displace vehicle fuel such as diesel and gasoline. This results in a direct and readily accountable GHG reduction.

However, quantification of the GHG reductions achieved by anaerobic digestion for all potential scenarios and protocols is very complex and beyond the scope of this study. Anaerobic digestion GHG reduction benefits are not factored in the emission reduction factors given below.

4.4.1 Natural gas displacement

The use of biomethane in lieu of natural gas would avoid the burning of fossil fuel. The biomethane production potential from readily available organic material for the Fraser Valley is 65,395,162 m^3 of biomethane per year [8]. With a combustion emission factor of 1.9 kg CO_2/m^3 of natural gas, this would result in the displacement of 124,000 tonnes of CO_2 equivalent per year.

4.4.2 Vehicle fuel displacement

The replacement of gasoline and diesel by compressed biomethane (CBM) would provide an opportunity to significantly reduce GHG emissions.

Table 16 - GHG emissions per km driver

2010 projections	Gasoline	Diesel	CNG	CBM
gCO_2 equiv/km	138.8	127.8	107.6	0[1]

[1]Neglecting N_2O and CH_4 leak emissions
Source: Well-to-wheels report **Error! Reference source not found.**

Using all the biomethane that could be generated by readily available organic material in the Fraser Valley to displace diesel fuel would save approximately 161,000 tonnes of CO_2 equivalents per year. This would reduce overall BC transportation GHG emissions (2002 report) [2] by approximately 1%.

5. Farm case study

To illustrate the reality of developing a farm-based biogas project in BC's Fraser Valley, a technical and economic case-study analyses were performed for an operational farm.

The majority of organic waste produced in the Fraser Valley is cow manure. Fresh cow manure is considered an ideal feedstock for anaerobic digestion since it has a balanced carbon to nitrogen ratio, a good buffering capacity and is rich in anaerobic bacteria. Cow manure is also the most forgiving feedstock for the anaerobic digestion process.

Poultry manure is the second largest source of organic waste in the Valley, but presents difficulties for anaerobic digestion. Grit settling and high nitrogen content make this feedstock a more complex feedstock to digest.

For these reasons, it was decided that the most simple, stable, reliable and representative biogas system would be a dairy farm anaerobic digester accepting off-farm waste and upgrading its biogas to biomethane for sale to the gas network.

5.1 Case farm selection procedures

Because of its potential to gather a large quantity of manure from neighbouring dairies, and its location near a Terasen pipeline tap (as illustrated in Figure 11), the same case farm as in the previous study [8] was selected.

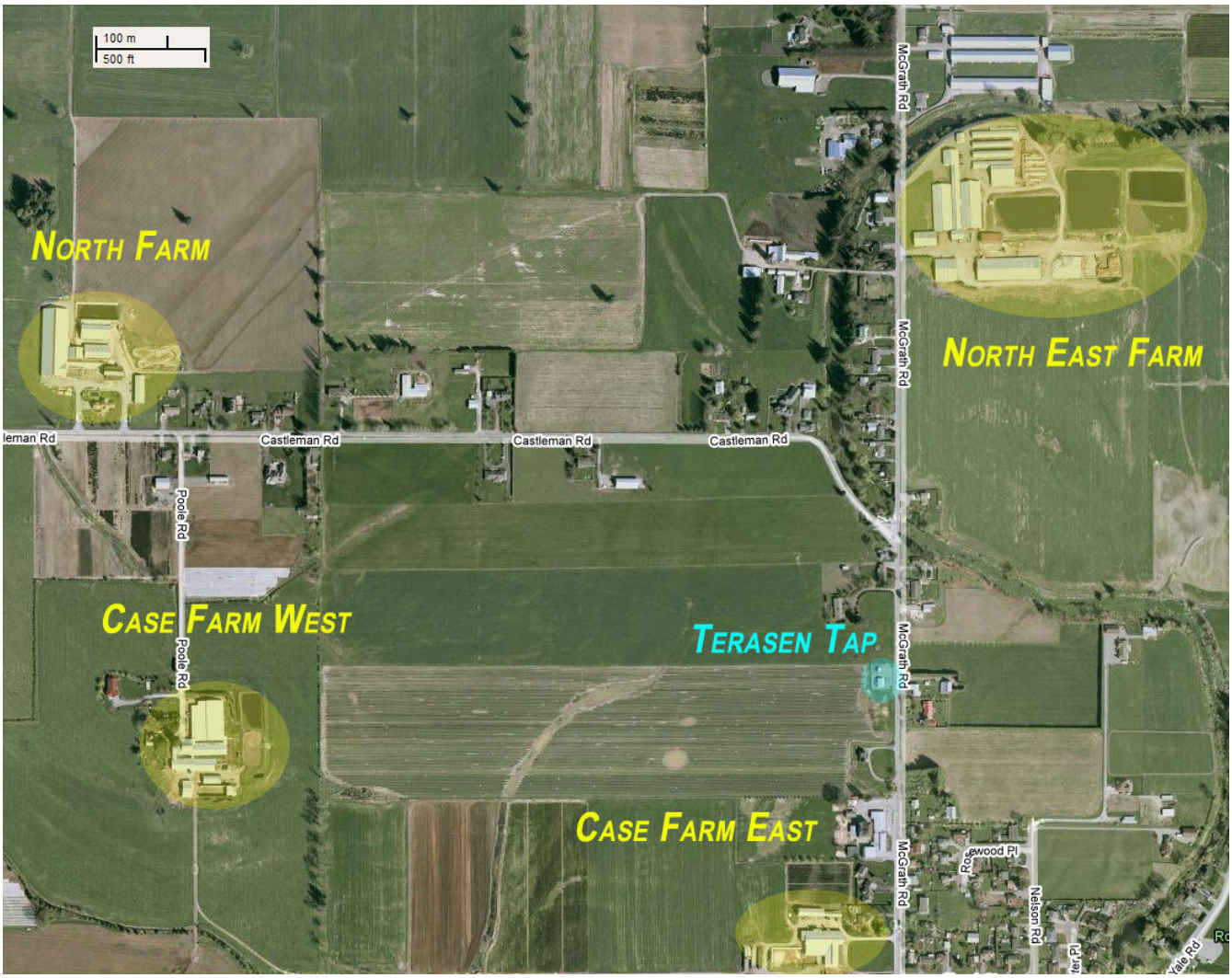

Figure 11 - Case study farm

5.2 Case farm description

The chosen farm is a dairy farm milking 450-cows, located in the municipality of Chilliwack.

The natural gas network at this location operates at 60psi and serves a large number of customers, enough to allow the case farm to inject biomethane even during low consumption periods.

The case farm includes 300 acres of grass land, and is composed of two farm sites located 250 meters away from each other.

5.2.1 Eastern farm site

The eastern farm, which is currently vacant, is only being used for manure and silage storage.

Figure 12 - Case farm eastern site

The site is near a Terasen pipeline tap station that connects the pipeline (high pressure) to the distribution network (low pressure).

5.2.2 Western farm site

The western farm site is where the manure resources are produced. The site is equipped with a large free stall barn, a smaller conventional barn, a 28-stall milking parlour, silage bunker storage and an earthen manure storage facility.

Stalls in the free stall barn are bedded with sawdust. Dry cows and replacement heifers are bedded on sawdust pack in the conventional barn.

The free stall barn is cleaned with scrapers which deposit manure into a concrete pit. When the pit is full, liquid manure is pumped to the exterior manure storage.

The solid pack manure is cleaned with a tractor. It represents approximately 3% of the total manure produced. Excess manure is pumped and stored in the eastern farm manure pit.

Manure is pumped from the manure pit directly to a tractor via a flexible rubber hose for application to cropland with a drag-line injection system. The system has the advantage of reduced land compaction (no heavy tanker traffic), ammonia volatilization and odour emissions because manure is directly injected at low pressure.

A manure pipeline is also installed to deliver manure from a neighbouring farm to the case farm fields. The drag-line system is attached to this pipeline, allowing for efficient application of the neighbouring farms manure resources.

Manure application is completed according to an agronomist's nutrient management plan.

5.2.3 Neighbouring farms

The case farm is bordered to the north by a 250 milking cows dairy farm, and to the north east by a 1,150 milking cows dairy farm.

The north east farm uses sand as cow bedding and a flush system for manure management. Flush water is processed through a drum separator where sludge is trucked off farm. Some water is recycled in the flush system while excess water is stored into a lagoon for land application.

There is an existing manure pipeline between the case farm and the north east farm. This currently facilitates the spreading of manure on land owned by the case farm.

5.3 Feedstock & biogas energy potential

5.3.1 On-farm feedstock

According to the farm owner, the farm generates, and has potential to use from neighbouring farms, approximately 50,000-tonnes of cow slurry and manure annually. For the sake of this case study, only 35,000-tonnes of cow slurry will be considered. The majority of the slurry will come from the north east farm via an existing pipeline that will have to be extended to the eastern site.

It is assumed that sludge can be pumped from the north east farm to the mixing pit, and that water from the separated digestate can be pumped back for use in the flush system. This would reduce typical odour issues associated with flush systems.

It is also assumed that the north east farm operator would switch from sand bedding to fibres produced by the digester to further reduce and avoid sedimentation of sand in the biogas system.

5.3.2 Off-farm feedstock

It is assumed that 7,600 tonnes per year of high energy off-farm waste (fats, oils, grease and food waste) can be accepted at $20/tonne gate fee. This waste would represent 19% of total waste handled on the farm.

This assumption is a reality in Ontario where the Ministry of Environment has allowed off-farm material to be up to 25% of the waste mass produced on farms.

With an average load of 20 tonnes, this would result in approximately 380 loads delivered per year, just over one truck per day.

5.3.3 Biogas energy potential

The following table outlines the feedstock quantities necessary to produce approximately 250 m^3/h of biogas.

Table 17 - Case farm study energy potential

Feedstock description	Annual quantity	Dry matter	Biogas produced	Energy
	(tonnes/year)	*(%)*	*(m^3/year)*	*(GJ/year)*
Cow slurry	32,000	10	716,800	14,887
Food waste	4,000	23	286,580	5,735
Fat, oil and grease	3,600	36	1,299,936	32,198
	39,600		2,303,316	52,820

This table shows how off-farm wastes, particularly fats, oils and greases, are important for biogas production. The use of manure alone would not produce enough biogas to justify investment in a biogas upgrading system.

5.3.4 Site Schematic and process flow chart

Figures 13 and 14 represent the process flow chart and biogas equipment layout schematic, respectively.

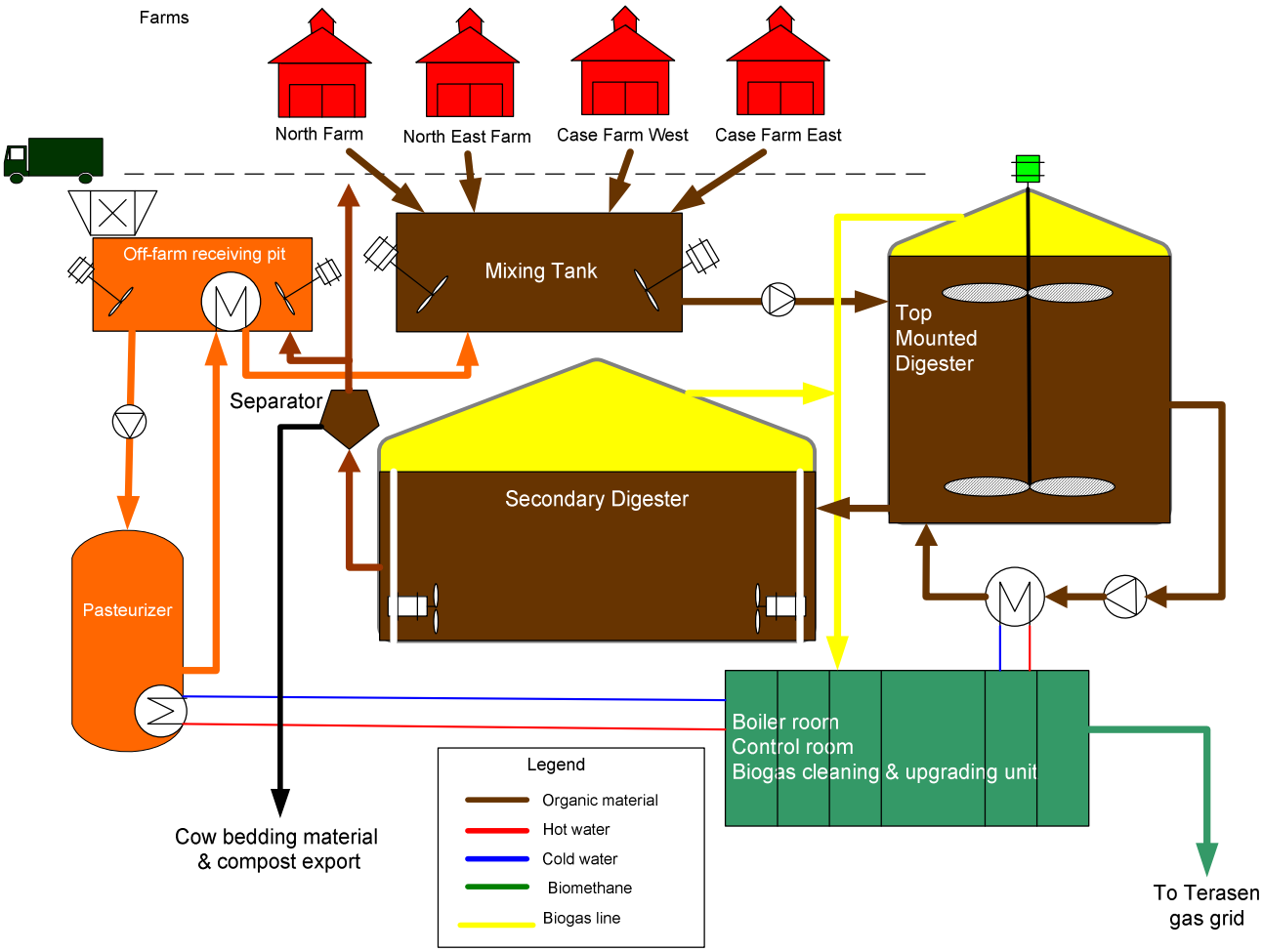

Figure 13 - Case farm process flowchart

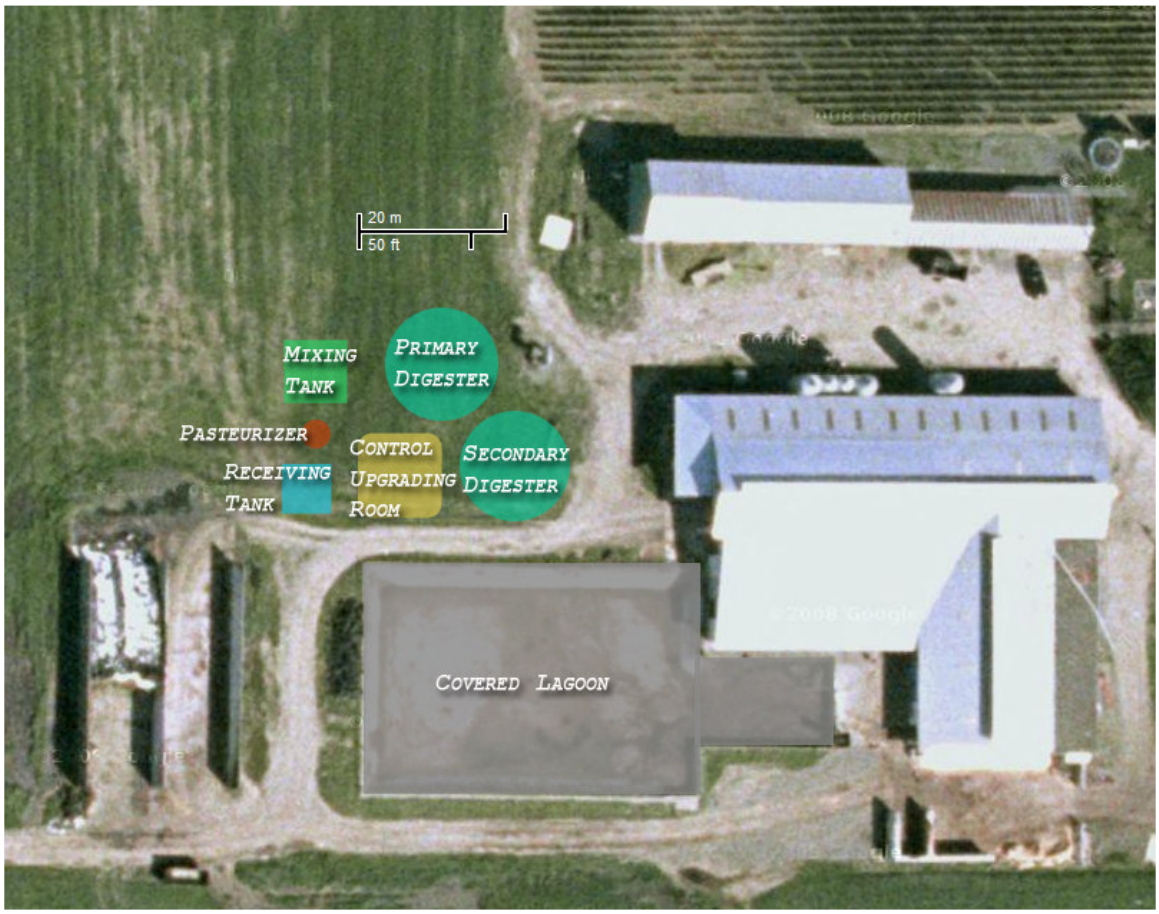

Figure 14 - Farm with scaled anaerobic digester plant

5.4 Recommended biogas plant specifications

Because the biogas plant is located on the eastern site, manure will have to be delivered to the facility by regularly pumping from the barn scraper pit into the biogas mixing pit via a pipeline or hose.

The recommended biogas system is a top-mounted mesophilic digester (35° C) coupled with a secondary digester acting as digestate and gas storage. A top-mounted digester is the most efficient digester as it allows for effective digestion of various feedstocks and reduces any issues with the formation of swimming layers from feedstock with different densities.

The lower cost plug flow design was not considered because of potential crusting issues and poor mixing capability. Efficient mixing capability is required in the digestion of off-farm waste such as fats and kitchen waste.

5.4.1 Off-farm receiving pit

The receiving pit is an insulated underground roofed concrete tank with a capacity of 225 m^3 equipped with 2 top mounted mixers (3 days worth of storage).

Depending on the off-farm waste, the receiving pit may need to be covered with a receiving hall building that would be used as a dumping platform for incoming waste. Food waste would then be fed into a shredder and then into a pit. In this study, it is assumed that the receiving pit will not require a receiving hall building.

The receiving pit will be equipped with a large trap door that can be opened for accepting solid or liquid off-farm waste, but would otherwise remain closed to reduce odour emissions.

The receiving pit will accept water from the liquid/solid separator to ensure proper dilution of incoming solids.

Due to the type of off-farm waste being delivered, the tank will require the installation of a bio-filter to ensure odour control and a cutting pump to ensure substrate homogenization prior to pasteurization.

5.4.2 Mixing pit

The mixing pit is an insulated underground roofed concrete tank with a capacity of 325 m^3 equipped with 2-top mounted mixers (2 days worth of storage). The mixing pit is also equipped with a large trap door that can be opened for occasional sedimentation clean up.

5.4.3 Primary digester

The primary digester consists of an above ground 3,650 m^3 glass coated-bolted steel tank with a diameter of 16.6 meters and a height of 17.1 meters. The tank is equipped with a hard structural insulated roof capable of accepting a top-mounted mixer.

The digester will be insulated and shielded with aluminium cladding. Heating of the digester will be performed by re-circulating substrate through a heat exchanger heated with the boiler.

The primary digester will be equipped with negative and positive pressure safety release valves.

5.4.4 Secondary digester

The secondary digester will consist of a half-buried 1,200 m^3 concrete tank with a diameter of 16 meters and a depth of six meters. The tank is equipped with a central concrete pillar upon which a wooden sub-floor will rest to form the roof structure. Gapped wooden boards complete the construction of the structural roof.

A double membrane cover system will be attached to the rim of the concrete tank using a tube-and-groove system. The top membrane will be kept inflated with a small blower. This system prevents precipitation accumulation on the digester roof. The inner membrane inflates and deflates depending on biogas production.

The tank foundation and walls will be insulated with foam boards and cladding will be attached to the walls with steel brackets.

The top 1-m of the inside walls will be covered with concrete corrosion protection membrane placed on the forms prior to pouring concrete. Membrane anchors will be installed in the concrete to keep the membrane in place once the concrete forms are removed.

The secondary digester will be equipped with 2 drop-in mixers and negative and positive pressure safety release valves.

5.4.5 Pasteurization unit

Off-farm rules and regulations may require pasteurization of all off-farm waste. Pasteurization is defined by raising the waste material temperature to 70° C for one hour.

In this scenario, material will be pumped from the receiving pit into an 80 m^3 pasteurizer. After pasteurization the material will pass through a heat exchanger in the receiving pit before being pumped to the mixing pit. This will reduce the temperature of the feedstock material to avoid thermal shocking and increase temperature in the receiving pit, thus, reducing the pasteurizing system heat load.

5.4.6 Biogas cleaning

Biogas containing 61% CH_4 will be expected to flow at 250m^3/h. A drip trap is a first essential step for bulk removal of excess water in the biogas line. Gas pre-cooling, water removal and filtering are then needed. This can be done by a refrigeration unit, a drip trap and a coalescent filter

An average of 1500ppm of H_2S will then be abated to a level of 2ppm by using a Sulfatreat system (iron oxide based). This low level of H_2S will ensure that the PSA adsorption medium is not contaminated and that sulphide levels will be kept below 4ppm after CO_2 removal. This type of H_2S scrubber typically has to be emptied and refilled once or twice every year, allowing for minimal shutdown time.

5.4.7 Biogas upgrading

A rapid cycle PSA system based on Quest Air's technology has been chosen for this case study. This will be skid mounted and contain all the necessary equipment for upgrading the biogas. The skid performs compression, water removal and filtering as well as upgrading the biogas using a one stage PSA.

Biomethane would exit the upgrading unit at a flow rate of $122m^3/h$ at 96% CH_4. This stream contains $36.25MJ/m^3$ (HHV) and is slightly above the $36MJ/m^3$ required by the utility. The biomethane should meet all other requirements of Terasen Gas provided that no leaks are present in the digester, and that proper dewatering is performed. The biomethane will be at 85psi and ambient temperature.

The skid would have to be located indoors since the process has to happen at ambient temperatures between 4ºC and 48 ºC.

The exhaust will flow at $128m^3/h$, and it will consist of 22% methane, the rest being CO_2, for a total CH_4 recovery of 83%. This stream will flow to the boiler where it can be used as an energy source for heating the digester. Any excess exhaust gas will be flared. The upgrading plant will run at 100% capacity, and has the ability to run at a flow rate 40% lower than the rated capacity of the plant.

5.4.8 Biogas injecting and monitoring

All monitoring done by the plant owner will be accessible to the Terasen Gas flow computer. Moreover, Terasen Gas will have its own specific gravity meter (for monitoring relative proportions of CO_2 and CH_4), flow meter and shut-off valve. This valve, when closed, will return off-specification biomethane to the plant so that it can be flared. Once every two weeks, a technician will take samples through the sampling port to allow testing of other suspected contaminants and exact heating values.

A 300m pipeline will have to be laid from the upgrading plant to the injection point.

A pressure regulator will bring the pressure down from 85psi to 60psi and an odorizer will be installed so as to add Scentinel S-35 at $14mg/nm^3$ using a wick system.

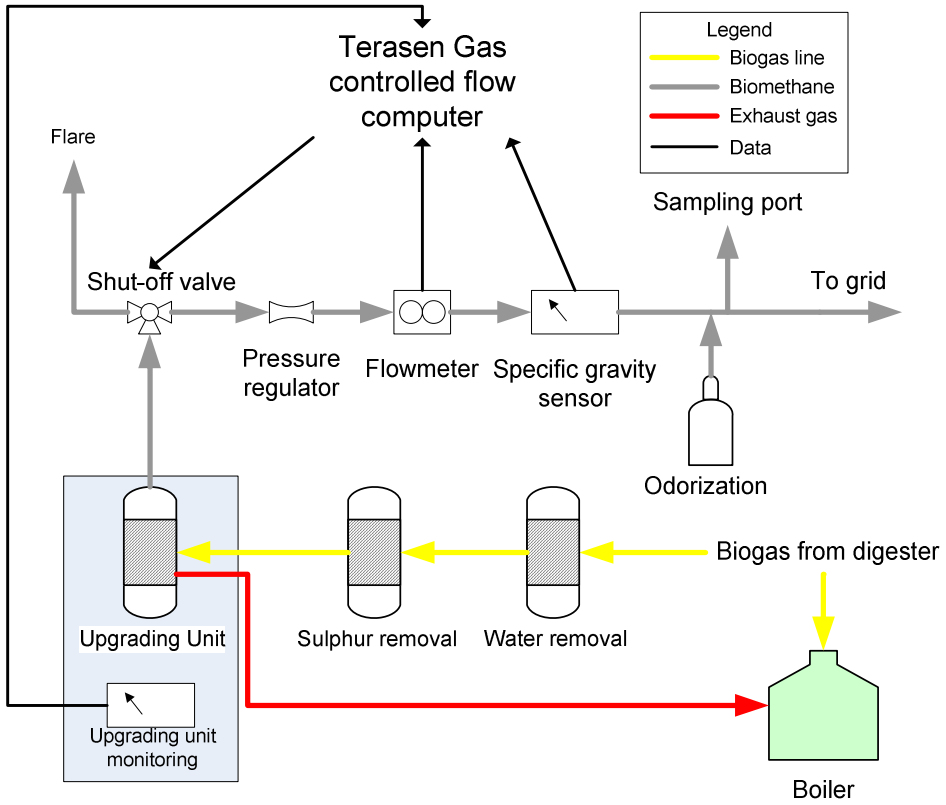

Figure 15 - Biomethane upgrading and injection scheme

5.4.9 Boiler

A boiler will be necessary to provide heat for the digester and pasteurizer. The boiler will burn a mix of raw biogas and exhaust gas from the burner using 25% of the total biogas energy produced by the digester. The remaining energy will be sold as biomethane.

5.4.10 Safety

The biogas plant should be equipped with a flare (300 m^3/hour) to avoid unnecessary emissions during servicing of the upgrading plant or occasionally disconnecting from the gas network. The flare will have to handle large fluctuations in methane concentration: 22% CH_4 when the exhaust is flared to 61% when biogas is flared. More fluctuations can also take place due to feedstock and digester performance. Such a flare is typically more costly and is enclosed.

5.4.11 Manure separator

Manure separation is recommended and the fibre component will be used as bedding for the cows. This will reduce bedding and manure spreading costs and will eliminate sawdust and sand in the manure stream (a non-desirable substrate for anaerobic digestion). It will also enable the recovery of dilution water for the off-farm wastes, which needs to be liquid enough for pumping to the pasteurizer.

5.4.12 Digestate storage

It is recommended to cover the manure pit with a floating cover to maximize biogas recovery and minimize ammonia emissions, odours and rainwater dilution.

5.4.13 Control and upgrading building

This building is necessary to house boiler, biogas cleaning and upgrading equipment, pumps, heat exchangers, control systems, office, etc.

5.5 Economic analysis of the project

Without off-farm waste, this project would not be feasible. Technically the off-farm waste is necessary to ensure a high enough biogas flow to justify the biogas upgrading capital investment.

Economically, the off-farm waste must generate gate fees to allow the resell of biomethane at a price lower than the no-gate-fee scenario presented in chapter 3.

Other revenue streams such as carbon credits, bedding savings, fertilizer savings, although not included in this analysis, may further reduce the price of energy sold.

Table 17 present only a snapshot of the operator's annual cash flow for the first five years of the project. See Appendix D for more details on pro-forma economic calculations and assumptions to complete the economic analysis.

5.5.1 Capital investment

It is estimated that a top-mounted digester system with a secondary digester capable of processing 40,000 tonnes of waste per year and pasteurizing 19% of its input would cost approximately $2 million. This estimation is a cost projection based on recently built comparable anaerobic digesters in North America. Appendix E provides an equipment list and cost breakdown to corroborate this estimate.

Based on a quote from Questair and some adjustments made for engineering and installation, it is estimated that the biogas cleaning, upgrading, monitoring and injection equipment would cost approximately $1.1 million.

Waste handling and processing equipment such as separators, piping, shredders, etc…, were estimated at approximately $400,000.

It is, therefore, estimated that this 250 m3/hour biogas and upgrading plant would cost approximately $3.5 million CND. It was assumed that the project would be financed at 90% and that 10% would be equity in the form of a cashdown and/or grants.

5.5.2 Cashflow analysis

As mentioned previously, it is essential for this project to secure high energy feedstocks that generate gate fees. Assuming 7,600 tonnes of off-farm waste, generating gate fees of $20/tonne for the fats, oils and grease and $30/tonne for the food waste, this would allow for resell of biomethane at a minimum price of $10.70/GJ.

Table 18 - Project cash flow with gate fees and biomethane sold at $10.70/GJ

	Year 1	*Year 2*	*Year 3*	*Year 4*	*Year 5*
Revenue/Savings					
Biomethane	$432,273	$438,757	$445,338	$452,018	$458,798
GHG carbon credits	$0	$0	$0	$0	$0
Manure spreading	$5,000	$5,150	$5,305	$5,464	$5,628
Fertilizer cost	$3,000	$3,090	$3,183	$3,278	$3,377
Bedding	$40,000	$41,200	$42,436	$43,709	$45,020
Gate fees	$192,000	$197,760	$203,693	$209,804	$216,098
Total	$ 672,273	$ 685,957	$ 699,954	$ 714,273	$ 728,920
* Biomethane sold at	$10.70	per GJ			
Expenses					
Gas cleaning material	$80,000	$82,400	$84,872	$87,418	$90,041
Upgrading electricity	$40,000	$41,200	$42,436	$43,709	$45,020
Lab Analysis	$3,750	$3,863	$3,978	$4,098	$4,221
AD plant electricity	$10,167	$10,472	$10,786	$11,110	$11,443
Insurance	$8,632	$8,891	$9,158	$9,433	$9,716
General Maintenance	$51,794	$53,348	$54,948	$56,597	$58,294
Labour	$14,600	$15,038	$15,489	$15,954	$16,432
Debt service	$440,015	$440,015	$440,015	$440,015	$440,015
Total	$648,958	$655,227	$661,683	$668,333	$675,183
Net cashflow	$23,314	$30,730	$38,271	$45,939	$53,738

Covered storage of digestate will reduce rain in the manure and, therefore, spreading cost. The nitrification of nitrogen in the anaerobic digester will prevent ammonia volatization, and will improve the fertilizing value of the digestate, therefore, reduce fertilization cost.

Note that the sale of carbon credits on one of the many carbon markets in existence could be claimed by the project developer. Like in the example above, these credits could be passed onto customers willing to pay more to buy carbon neutral biomethane. Conversely,

these credits could be claimed by the project developer to further reduce the price at which he sells his biomethane.

It is possible that gas distributors or industrial end customers could use or resell these credits to offset the premium they paid for the biomethane. However, without a solid regulatory framework and an established Canadian carbon market, it is highly speculative to propose the price of these credits.

5.5.3 Sensitivity analysis

Based on the cash-flow model presented above, it is clear that the most influential factor for biomethane pricing is the ability to find high value off-farm waste generating substantial gate fees. In the figure below the potential resell price of biomethane is plotted against gate fees per tonne.

Note that current disposal cost in the lower mainland is $68.91/m3 at the wastewater plant and $65/tonne at the Vancouver landfill[8].

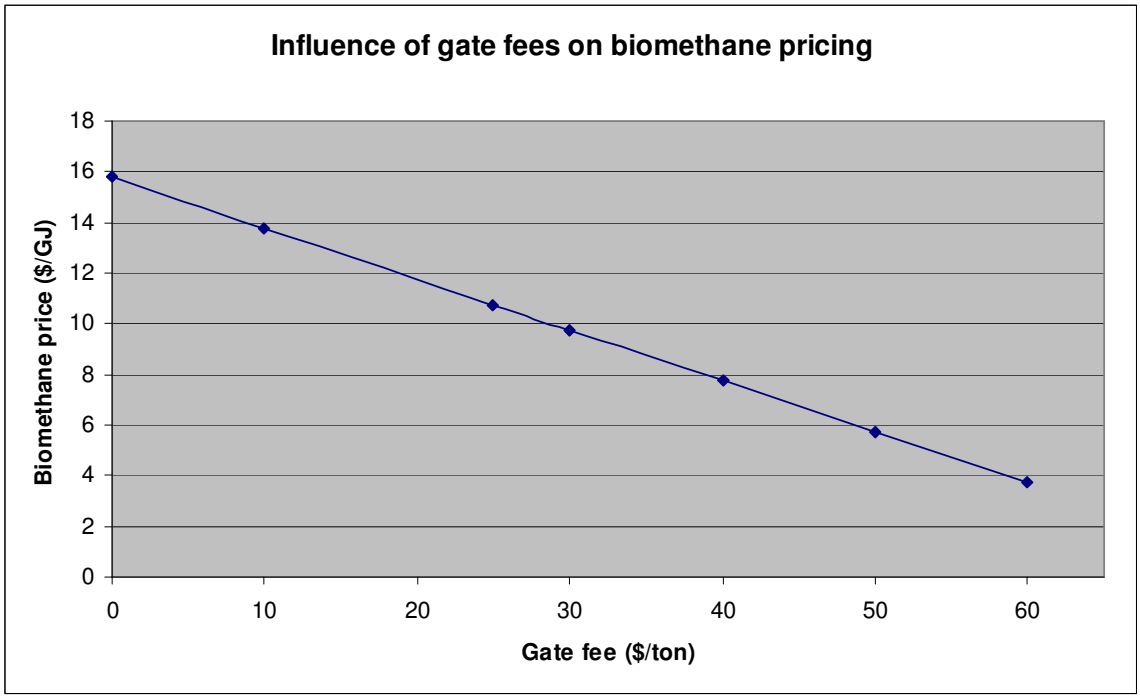

Figure 16 - Influence of gate fees on biomethane pricing

5.6 Environmental and social impact assessment

Based on an interview with the permitting office of the Chilliwack municipality. The most important social and environmental concerns, in order of priority, were:

- Odour,
- Truck traffic, and
- Air pollutant emissions.

The benefits of anaerobic digestion in reducing air emissions were discussed earlier in this document and should not present a barrier to the realization of this project.

Assuming 20-tonnes per load of off-farm waste, this would result in approximately one truck per day throughout the year and should not raise truck traffic concerns in an agricultural community.

The dumping and mixing of off-farm waste in the mixing pit could create odour issues. To mitigate this potential problem, it would be recommended for the receiving pit to be as air tight as possible and equipped with a bio-filter to scrub any odours produced.

Potential zoning issues relative to the generation and resale of energy on farm land were discussed. The municipality of Chilliwack does not perceive this as problematic so long as the core business remains agricultural.

According to the farm owner, the construction and operation of an anaerobic digester should not present issues with the local community. Furthermore, if it could demonstrate responsible manure management practices, odour reductions and increased profitability for the farm, it is believed that this project would be embraced by the community

5.6.1 Estimated project emissions

Assuming that gas streams exiting the system via the boiler, the flare and/or the grid, the following GHG and air pollutant emissions are expected:

Table 19 - Biogas upgrading emissions

	Emission Factor (EF)		*EF Units*	*Yearly emissions*
	*Boiler**	*Flare***		*(kg/yr)*
Air pollutants				
NO_x	69.8	19.7	g/GJ	763
SO_x	19.2	23.3	g/GJ	233
Ammonia	2.2	N/A	g/GJ	23.3
CO	58.6	2.4	g/GJ	623
TOC	7.7	N/A	g/GJ	81.4
VOC	3.8	N/A	g/GJ	40.2
PM10	5.3	36.9	g/GJ	103
PM2.5	5.3	36.9	g/GJ	103

*Assuming an energy consumption of 10,574 GJ/year and 200ppm H_2S.
**Assuming an energy consumption of 1,267 GJ/year and 99% combustion efficiency
Source: [12]

It is assumed that any GHG emissions (flare, boiler, leaks) are equal to the GHG reductions from the AD operation (no open manure storage, less N_2O production, etc). However, this assumption, lacking accepted methodology for assessment, is a conservative estimation of the GHG reductions from AD when compared to open-manure storage and landfilling of off-farm waste.

5.6.2 Fuel displacement

It is estimated that this case-study plant will upgrade 1,069,869 m^3 of biomethane every year. This will displace the equivalent in natural gas, and reduce GHG emissions by 2,032 tonnes CO_2 equivalent per year. Carbon credits for the biomethane could potentially be sold on one of the many carbon markets.

5.6.3 Farm nutrient management

By importing high energy off-farm waste material, the producer will increase the nutrient load on his farm. The table below evaluates the impact of this on the farm's nutrient balance.

Table 20 - Nutrient impact estimation

Manure	**Mass** *(tonnes/year)*	**N** *(kg/t)*	**Annual N** *(tonnes/year)*	**P** *(kg/t)*	**Annual P** *(tonnes/year)*	**K** *(kg/t)*	**Annual K** *(tonnes/year)*
Cow Slurry (10% DM)	32 000	2	64	0.5	16	2	64
Off-farm	**Mass** *(tonnes/year)*	**N** *(% dw)*	**Annual N** *(tonnes/year)*	**P** *(% dw)*	**Annual P** *(tonnes/year)*	**K** *(% dw)*	**Annual K** *(tonnes/year)*
Fat, Oil & Grease (36% DM)	3 600	0.25	3.24	0.001	0.013	0	0
Kitchen waste (23% DM)	4 000	2.5	23	0.4	3.68	0.9	8.28

Source: [7][9]

If the producer uses only carbon rich fats, oils and grease, this will minimize the importation of excess nitrogen and phosphorus onto the farm. However, if kitchen waste is used, then the importation of nutrients increases. Under this scenario, the increase in nutrient load would be 41% for nitrogen, 23% for phosphorous and 13% for potassium.

Importation of off-farm nutrients should be permitted in accordance with a proper nutrient management plan. This plan will insure that the farm does not overload its land with nutrients that could leach into the environment. Alternatively, excess nutrients can be exported off farm in the form of composted bio-fiber fertilizer. This will also generate revenue.

Phosphorous is generally concentrated in the solid fraction of digested manure. This allows for exportation of this nutrient towards markets where it is needed.

6. Project development guidelines

The following are essential steps that a biogas project developer should follow to bring an AD project to fruition. These steps may be realised in sequence or in parallel:.

- Securing feedstock,
- Selecting applicable technologies,
- Proper waste management planning (permit),
- Negotiating energy contracts,
- Affordable financing,
- Supervising implementation, and
- Commissioning.

While this looks simple, biogas systems are complex projects that require proper business planning, careful negotiation and constant vigilance of all involved.

6.1 Feedstock

A challenging part of project development, quantity and quality of feedstock must be established. Additionally, long term contracts for this feedstock must be secured early. These contracts should be in synchronization with energy contracts and guarantee a proper return on investment.

6.1.1 Feedstock quantity

The developer must ensure that the quantity of feedstock is constant. Biogas systems are optimized for a given flow rate and cannot withstand too much variation without decline in efficiency or problematic operation.

6.1.2 Feedstock quality

On a farm, manure quality is relatively constant. However, when importing off-farm waste quality can fluctuate greatly. A constant waste supply from an agro-food industry is a preferred feedstock as quality and quantity are more predictable than feedstock from various waste collectors. Great care must be taken to minimize contaminants (plastic, metal, chemical, antibiotics, etc.)

Contractual obligations with waste suppliers should include clauses to guarantee feedstock quality and protect the biogas operator in the event of contamination resulting from poor quality feedstock.

6.1.3 Gate fees

Off-farm wastes generate gate fees. Gate fee revenues often determine the technology used and the price at which biogas energy can be sold. It is therefore paramount to have firm and long term contractual agreements with waste suppliers to ensure stability of feedstock and revenue.

6.2 Applicable technologies

Biogas systems are designed around available feedstock and not vice versa. It is important that feedstock quantity and composition is known to ensure that the correct technology is used.

Biogas system vendors should be able to demonstrate experience with comparable projects, provide local service and maintenance resources, and guarantee that their equipment meets projected system efficiencies.

Equipment vendors should provide guarantees that their equipment meets the National Building code and BC Safety authority regulations.

Biogas vendors should not be relieved of their responsibilities until the system is functioning as planned. Vendors will have a tendency to blame feedstock quality for the poor performance of their equipment. To avoid these issues, proper feedstock definition and lab testing should be communicated to the vendors and agreed upon.

6.3 Permitting

Once the technology has been selected, an engineering study must be performed to produce sufficient technical information (sizing, plant layout, drawings, emission calculations) and to begin permitting procedures.

Biogas project developers will typically deal with local municipalities, the Ministry of Environment and possibly the Agricultural Land Commission (ALC).

Municipalities issue building permits to ensure that building codes (structural, electrical, gas, etc.) are respected. Municipalities will deliver siting permits to ensure land use rules and building setbacks are respected. These permits may be conditional to obtaining certificate of authorization from the Ministry of Environment.

Ministry of Environment required permit:

- Approval to bring off-farm waste onto the farm for processing, and
- Air emissions (if large project is not recognized as a normal farm practice)

Developers may also encounter zoning issues as energy production is not yet considered a normal farm practice by the ALC. This may require rezoning of ALR land to industrial land.

6.4 Energy contracts

To reduce unnecessary workloads, utilities will not negotiate energy contracts with project developers until essential permitting is in place.

Long term energy contracts, based on gate fees, should only be negotiated after feedstock has been contractually secured and that accurate project pricing and financing is known. Trying to negotiate energy contracts without a proper and accurate business plan is risky.

Interconnection costs should also be negotiated with the utility to determine cost, who pays for what and when it will be performed. Interconnection delays and unexpected implementation costs can seriously hinder project viability.

6.5 Financing

With a long term energy contract in hand, the developer can now negotiate financing for the project. Project developers should seek out financing institutions experienced in project financing to avoid high cost and unnecessary delays.

Typically, inexperienced financing institution will demand a higher level of equity in the project and will charge higher rates. This equity may come from the project developer or external investors.

Financing may be broken down into several loans (infrastructure, equipment, etc…) to minimize risk and cost for all parties involved.

Once the project is operational and demonstrating a viable cash flow, the project developers can seek "infrastructure financing" to repackage the financing at a more favourable rate.

6.6 Project implementation

With financing in place, construction can proceed. A site engineer is recommended to ensure supervision of construction and that design specifications are followed. Experience has shown that permitting, energy contract negotiations and financing can take 12 to 18 months to complete. A well-planned and managed construction schedule should take approximately 3 months.

6.7 Commissioning

Once the project is constructed, the biogas plant is started and unforeseen design or implementation mistakes are corrected. Biogas plant manufacturers guarantee certain biogas throughput for one year after which they are released from their obligations.

7. Biogas upgrading Barriers

7.1 Natural gas standards

Natural gas standards are established to ensure public safety and quality.

In BC, three companies transport and deliver natural gas to end customers. Westcoast (Spectra) has the transmission pipeline, while Terasen Gas and Pacific Northern Gas own the distribution networks.

Injection of biomethane in the Fraser Valley would have to be done into pipelines operated by Duke Energy or into the distribution network owned by Terasen Gas.

Since Terasen Gas gets most of its gas delivered via Westcoast pipeline, they have limited experience in negotiating interconnection and quality standards with natural gas producers. Therefore, currently there are no standards for biomethane interconnection with Terasen Gas.

7.1.1 Terasen Gas standards

Terasen Gas and Westcoast have not established a quality standard per se. Instead, quality requirements are set in contracts. These requirements state that any gas delivered has to meet minimum variable standards from one delivery point to another. Additionally, there is also one quality standard at the receipt point. See Appendix F.

Table 21 - Minimum gas quality at Terasen Gas receipt points

Parameter	Amount
Dust, oil, gums, impurities	Nothing that can injure pipeline
H_2S	<6 mg/m^3 (4.3ppm)
Water	<65mg/m^3 vapour, no liquid
Total sulphur	<115mg/m^3
CO_2	<2% per volume
Temperature	<54ºC
Higher heating value	>36MJ/nm^3 (95.5% methane)
Oxygen	<0.4% per volume

Some membrane technologies may have difficulties reaching the required level of CH_4.

As for odourization, Terasen Gas requires the addition of Scentinel S-35 at 14mg/nm^3. This chemical, which is a blend of 35% methyl ethyl sulphide and 65% tertiary butyl mercaptan, makes natural gas readily detectable in concentrations of above 0.5% in air.[21]

In North American, work is underway to create a single quality standard for natural gas distribution systems that will allow supply from non-conventional sources like biomethane. Once in place, this will facilitate the introduction of biomethane into gas distribution systems.

7.2 Regulatory barriers

As mentioned in the previous study [8], regulatory barriers are:

- Lack of regulations on importing off farm waste,
- Production of energy not recognized as normal farm practice (ALC), and
- Air emissions.

Similarly to electrical power production, biomethane projects may not be recognized as normal farm practices and therefore may fail to meet zoning requirements. However, this barrier has been recognized and future ALC reforms will take this into consideration.

Injection of biomethane into a high pressure pipeline belonging to a company operating in several provinces, territories or countries would require the pipeline companies to get

approval from the National Energy Board. Thankfully, since it only operates in BC, this is not the case if the biomethane was to transit via Terasen Gas' pipelines.

For injection into Terasen Gas' distribution network, biomethane installations and interconnection would be subject to BC Safety Authorities' regulating gas installations.

Contract for the sell of biomethane to Terasen Gas, gas marketers or end customers may be subject to BCUC approval.

7.3 Political barriers

Since it is a carbon neutral renewable energy that can replace natural gas in residential, commercial, industrial and vehicle applications, RNG is unlikely to meet significant political barriers. The BC Carbon tax and commitment from the BC government to become carbon neutral by 2010 further legitimizes the production of biomethane from waste in the Fraser Valley.

Additionally, because biomethane can be used as vehicle fuel (CNG) it should be recognized as a biofuel and benefit from tax breaks, de-taxing and subsidies that the ethanol and biodiesel industries enjoy.

Furthermore, because potential volumes will be relatively small, biomethane production is unlikely to upset gas producers or transporters.

7.4 Commercial barriers

With government and utilities embracing the production and commercialization of biomethane, the only significant barrier is its relatively higher price compare to natural gas.

However, with the introduction of BC's carbon tax on July 1st, 2008 (this will increase from \$10/tonne CO_2 equivalent (\$0.4988/GJ natural gas) in 2008 to 30\$ (\$1.4964/GJ natural gas) in 2012), an upgrading plant generating a \$25/ton gate fee (see case study) could be able to sell its biomethane at a retail price of \$13.01/GJ. This means that biomethane will be able to compete with natural gas on price. This does not include any additional revenue from the potential sale of carbon credits.

8. Potential of biomethane in the Fraser Valley

In the previous study [8] the total biogas energy potential in the Fraser Valley was estimated as equivalent to 122.7 million m^3/year of natural gas [8]. Current natural gas consumption in the Valley is 3.4 billion m^3per year.

Table 22 - Price of various fuels

	Energy	Transport	Distribution	Retail	Retail	Retail 2012 taxed
	($/GJ)	($/GJ)	($/GJ)	($/litre)	($/GJ)	($/GJ)
biogas	7.72				7.72	7.72
biomethane -no gate fee	15.00		2.31		17.31	17.31
biomethane -case study	10.70		2.31		13.01	13.01
natural gas	8.29	1.35	2.31		11.95	13.45
heating oil				1.20	32.09	34.30
electricity				7¢/kWh	19.44	19.44
propane gasoline				0.65 1.20	27.08 37.50	27.72 39.76
diesel				1.30	36.11	38.41
CNG				0.65/LGE	20.31	21.81
CBM -no gate fee					27.90	27.90
CBM -case study					24.89	24.89

Energy cost is on LHV basis for automotive fuels.
Cost of CBM is cost of CNG plus the incremental cost of biomethane over natural gas (converted to LHV).
Carbon tax taken from BC Budget, 2008 [3].
Transport and distribution rates are taken from Terasen Gas tarification, April 1st 2008, small commercial fares [20].

The cost difference between natural gas and Compressed Natural Gas (CNG) is the cost of operating a high compression filling station. The same differential was applied to the difference between biomethane and Compressed Biomethane (CBM).

Biogas is a carbon neutral renewable energy assumed to be consumed directly where it is produced. Therefore there are no delivery charges or taxes, such as the BC carbon tax.

Figure 17 shows a cost breakdown comparison of delivered biogas, biomethane and natural gas.

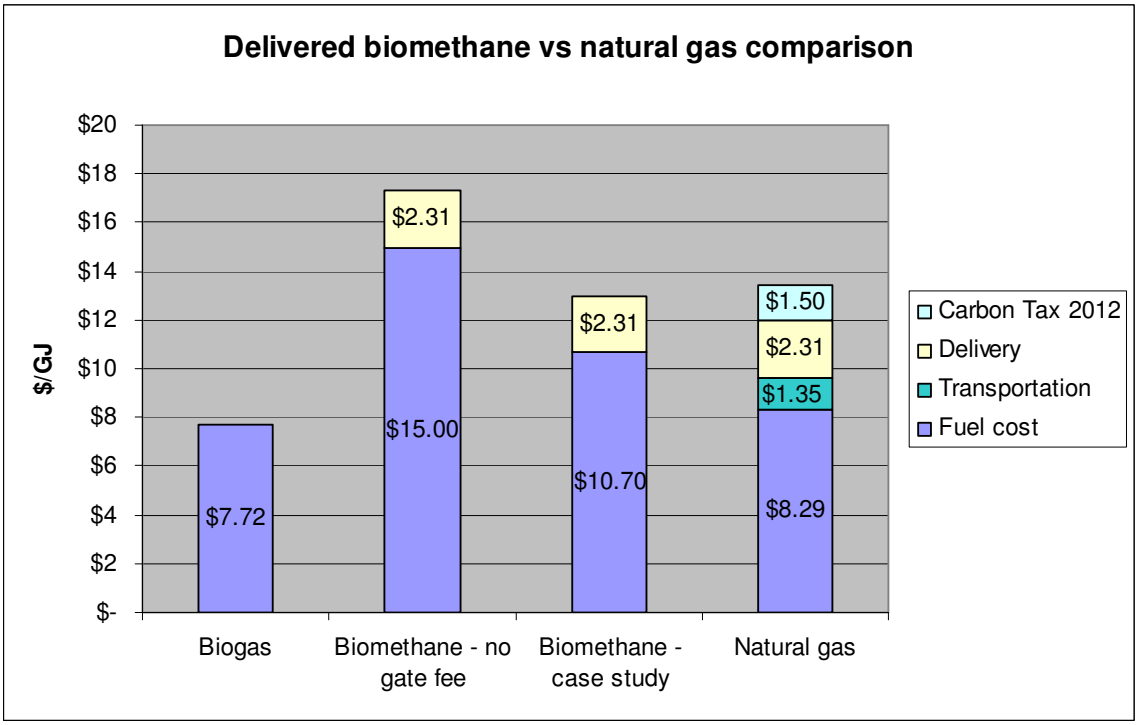

Figure 17 - Biomethane vs. natural gas comparison

The graph above, in which the carbon tax is calculated using 2012 taxation levels, clearly shows that biomethane projects have the potential to compete directly with natural gas.

In figure 18 below, the retail (delivered) cost of various fuels is compared. Note that CBM for automotive application offers significant cost reduction and direct environmental benefits, such as air quality improvement.

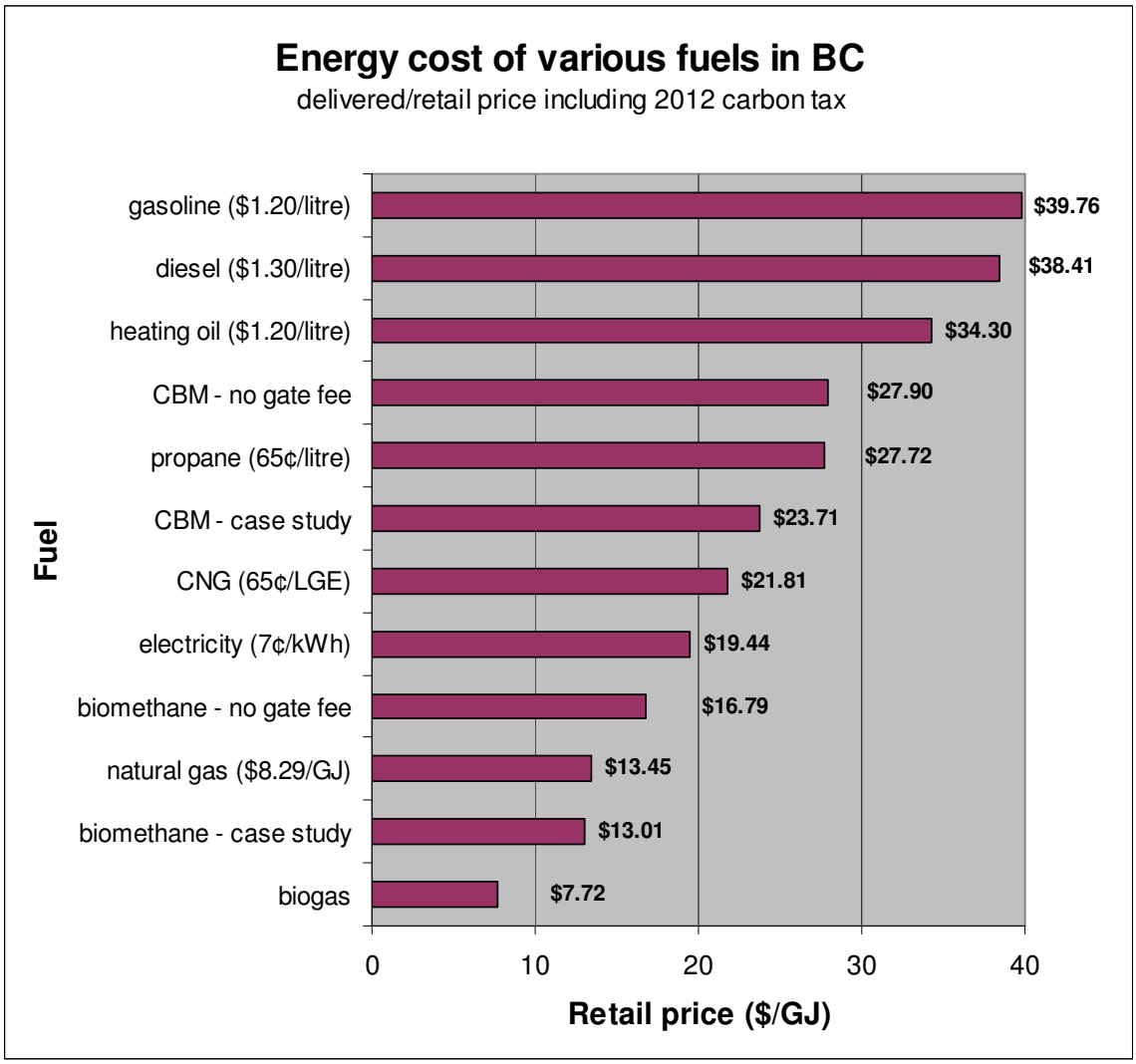

Figure 18 - Retail energy cost of various fuels in BC

While slightly more expensive than natural gas, biomethane has environmental benefits that are difficult to quantify. The carbon tax places a monetary value on a small portion of these benefits by penalizing fossil fuel energies. Gas marketers could sell biomethane at a premium to consumers willing to pay for its environmental attributes. Moreover, biomethane has the potential to be an economic and environmentally friendly alternative to electricity, diesel, gasoline, heating oil and propane.

Since four of these fuels have automotive applications, there is real potential for CBM as a vehicle fuel. Consideration of this alternative needs further details, such as the energy efficiency of automotive fuels.

The economic performance of gasoline, diesel, CNG and CBM are shown below in terms of cost per distance travelled.

Cost per unit energy sent to the vehicle's wheels is determined by calculating the efficiency of a motor at converting fuel energy to mechanical energy.

Table 23 - Cost of energy delivered to vehicle wheels for various fuels

	Retail with 2012 carbon tax Cost($/GJ)	Aggregated energy requirement (MJ/100km)*	Aggregated cost ($/100km)
Gasoline - direct injection spark ignition	39.76	187.9	7.47
Diesel - direct injection compressed ignition	38.41	172.1	6.61
CNG	21.81	187.2	4.08
CBM - no gate fee	27.98	187.2	5.24
CBM - case study	23.71	187.2	4.44

*Source: tank-to-wheels report [4]

We can see from this table that it is almost twice as cheap to run a car on CNG than gasoline and that it is more advantageous to run it on CBM than gasoline or diesel. Disadvantages of CNG-CBM vehicle are low availability of vehicles, refuelling stations and lower fuel autonomy than liquid fuels.

9. Conclusion

Anaerobic digestion and biogas upgrading are widespread mature technologies used extensively throughout Europe and the USA.

Because hydroelectricity is inexpensive and does not emit GHG, in BC, conversion of biogas energy into biomethane presents clear economical and environmental advantages to conversion into electricity.

Organic waste generated in the lower mainland has the potential to produce and displace the equivalent of over 120 million cubic meter of natural gas per year. That is approximately 3.5% of the current lower mainland natural gas consumption.

Today the natural gas commodity charge is $8.29/GJ. A biomethane commodity charge could range from $9/GJ to $15/GJ depending on the ability of the project to generate gate fees for accepted off-farm waste streams. Additionally, locally produced biomethane will be exempt from the BC carbon tax ($1.5/GJ in 2012) and will avoid pipeline transportation costs. Therefore, on-farm biomethane production can be cost competitive with fossil natural gas (price?) and can be distributed and consumed using the existing natural gas infrastructure.

Biomethane production offers several environmental benefits. Utilisation as a vehicle fuel to replace diesel or gasoline would result in further benefits such as significant air quality improvement in the lower mainland and reduced GHG emissions.

Higher gate fees for land filling of organic material would create an incentive to divert organic material from landfills towards anaerobic digesters for production of biomethane and reduce the use of chemical fertilizers. A regulatory framework for importation of off-farm waste onto farm is currently under development by the BC government.

The development of a biogas industry in the Fraser Valley would stimulate rural economic development and funnel significant revenue into the local economy.

In its quest to become carbon neutral, the BC government could show leadership by buying biomethane at a premium to fuel its vehicle fleets and heat its buildings.

Biomethane production from organic waste is a practical, sensible and inexpensive solution to mitigate GHG emissions and improve air quality in the Fraser Valley.

References

[1]. Biomil AB, Questions, answers, conversation log between Biomil AB and Electrigaz, Appendix G, Canada, 2008

[2]. British Columbia Ministry of Water, Land and Air protection, Environment Indicator: Greenhouse gas emissions in British Columbia, 2002

[3]. British Columbia Ministry of Finance (2008) Budget and fiscal plan.

[4]. Chantigny and al, Gaseous nitrogen emission and forage uptake on soils with raw and treated swine manure, 2007

[5]. Concawe, Eucar, European Commission, (2007) Well-to-wheels analysis of future automotive fuels and powertrains in the European context. Version 2c. PDF accessed on 12/05/2008 at http://ies.jrc.ec.europa.eu/WTW.

[6]. Cope C (2008) Michigan Gas Utilities. Personal communication on 04/30/08.

[7]. Department of Biological and Agricultural Engineering at the University of Idaho, Biodiesel Technotes, Fall 2006, Volume 3, Issue 3

[8]. Electrigaz Technologies inc. (2007) Feasibility study – Anaerobic digester and gas processing facility in the Fraser Valley, British Columbia. Prepared for BC Bioproducts Association, submitted December 2007.

[9]. Hansen T L, Jansen J L C, Spliid H, Davidsson A, Christensen T H (2007) Composition of source-sorted municipal organic waste collected in Danish cities. Waste management ISSN 0956-053X. 2007, vol. 27, nº4, pp. 510-518.

[10]. Hagen M, Polman E, Myken A, Jensen J, Jonsson O, Dahl A (2001) Adding gas from biomass to the gas grid. PDF accessed on 02/14/2008 at http://gasunie.eldoc.ub.rug.nl/FILES/root/2001/2044668/2044668.pdf.

[11]. IEA Bioenergy (1999) Biogas upgrading and utilization. Task 24-Energy from biological conversion of organic wastes. PDF accessed on 02/18/2008 at http://www.iea-biogas.net/Dokumente/Biogas%20upgrading.pdf.

[12]. IEA Bioenergy (2000) Biogas flares: state of the art and market review. Task 24-Biological conversion of municipal solid waste. PDF accessed on 04/18/2008 at www.iea-biogas.net/Dokumente/Flaring_4-4.PDF

[13]. McDonald N (2008) Phase-3 Renewables. Personal communication 03/21/2008.

[14]. Persson M (2003) Evaluation of upgrading techniques for biogas. Swedish Gas Center, Report SGC 142. PDF accessed on 02/20/2008 at http://www.sgc.se/rapporter/resources/Evaluation.pdf.

[15]. Persson M (2007) Biogas upgrading and utilization as a vehicle fuel. European biogas workshop: The future of biogas in Europe III. PDF accessed on 02/27/2008 at http://www.ramiran.net/doc07/Biogas%20III/Margareta_Persson.pdf.

[16]. Persson M, Jonsson O, Wellinger A (2006) Biogas upgrading to vehicle fuel standards and grid injection. IEA Bioenergy, Task 37-Energy from Biogas and Landfill Gas.

[17]. Wheelis E (2008) Personal communication. Puente hills landfill. 03/21/2008.

[18]. Saikkonen K A (2006) Technical and economic feasibility of upgrading dairy manure-derived biogas for natural gas pipeline. Master's thesis, Cornell University.

[19]. Tansley M (2008) Personal communication. T-Line Products Ltd. 04/07/2008.

[20]. Terasen Gas (2008) Natural gas rates. Rate change effective April 1, 2008. Revision #0.

[21]. Wilcock C (2008) Personal communication. Terasen Gas. 03/29/2008.

[22]. Westcoast Energy inc. (1998) General terms and conditions – service. Article 12 - Gas and hydrocarbon liquids quality. From contract between Terasen Gas and Westcoast energy inc. Provided by Terasen Gas on 03/05/2008.

Appendix A

Biogas upgrading plants

Country	Plant	Biomethane use	Source	Minimum CH4 content	Upgrading technology	H2S removal technique	Biogas capacity (m3/h)	Year built
Czech republic	Bystrani/Teplice	Vehicle fuel	Digester	95%	Water scrubbing	Water scrubbing	368	1985
	Bystrica	Vehicle fuel	Digester	95%	Water scrubbing	Water scrubbing	186	1990
	Chanov/Most	Vehicle fuel	Digester	95%	Water scrubbing	Water scrubbing	186	1990
	Liberec	Vehicle fuel	Digester	95%	Water scrubbing	Water scrubbing	368	1988
	Zlin/Tecovice	Vehicle fuel	Digester	95%	Water scrubbing	Water scrubbing	186	1990
France	Chambery	Vehicle fuel	Digester	97%	Water scrubbing	Water scrubbing	30	
	Lille	Vehicle fuel	Digester	97%	Water scrubbing	Water scrubbing	1200	2007
	Lille	Vehicle fuel	Digester		Water scrubbing	Water scrubbing	100	1993
	Tours	Vehicle fuel	Landfill		Water scrubbing	Water scrubbing	200	1994
The Netherlands	Collendorn	Grid injection	Landfill	88%	Membrane	Activated carbon	375	1991
	Gorredijk	Grid injection	Landfill	88%	Membrane	Activated carbon	400	1994
	Nuenen	Grid injection	Landfill	88%	PSA	Activated carbon	1500	1990
	Tilburg	Grid injection	Landfill+digester	88%	Water scrubbing	Iron oxide	2100	1987
	Wijster	Grid injection	Landfill	88%	PSA	Activated carbon	1150	1989
New Zealand	Christchurch	Vehicle fuel			Water scrubbing			
Sweden	Eslov	Vehicle fuel	Digester	97%	Water scrubbing	Water scrubbing	40	1998
	Boras	Vehicle fuel	Digester	97%	Chemisorption	Activated carbon	300	2002
	Bromma		Digester		PSA		800	
	Bromma				Water scrubbing	None	55	
	Goteborg	Vehicle fuel	Digester	97%	PSA	Activated carbon	6	1992
	Goteborg	Grid injection	Digester	97%	Chemisorption	Activated carbon	1600	2006
	Ellinge				Water scrubbing	None	70	
	Kristianstad				Water scrubbing	None	175	
	Helsingborg	Vehicle fuel	Digester	97%	PSA	Activated carbon	16	1996
	Helsingborg	Vehicle fuel+gas grid	Digester	97%	PSA	Activated carbon	350	2002
	NSR Helsingborg		Digester	97%	Water scrubbing		650	2008
	Helsingborg WWTP		Digester	97%	Water scrubbing		250	2008
	Kalmar	Vehicle fuel	Digester	97%	Water scrubbing	Water scrubbing	65	1998
	Kalmar		Digester	97%	Chemisorption		200	2008
	Laholm		Digester	97%	Water scrubbing	SulfaTreat	2000	
	Linkoping	Vehicle fuel	Digester	97%	Water scrubbing	Iron chloride+water s	660	1997
	Linkoping	Vehicle fuel	Digester	97%	PSA		200	1991
	Skovde	Vehicle fuel	Digester	97%	PSA		110	2003
	Stockholm	Vehicle fuel	Digester	97%	Water scrubbing	Water scrubbing	45	1997
	Stockholm	Vehicle fuel	Digester	97%	PSA	Activated carbon	600	2000
	Stockholm	Vehicle fuel	Digester	97%	Water scrubbing	Water scrubbing	800	2006
	Trollhattan	Vehicle fuel	Digester	97%	Water scrubbing	Water scrubbing	400	2001
	Uppsala	Vehicle fuel	Digester	97%	Water scrubbing	Water scrubbing	400	2002
	Malmo	Vehicle fuel+gas grid	Digester	97%	PSA	Activated carbon	500	2006
Switzerland	Bachenbulach	Vehicle fuel	Digester	96%	PSA	Activated carbon	45	1995
	Otelfingen	Vehicle fuel	Digester	96%	PSA	Activated carbon	55	1997
	Rumlang	Vehicle fuel	Digester	96%	PSA	Activated carbon	20	1997
	Herrnschwanden	Vehicle fuel+gas grid	Digester		PSA	Activated carbon	350	2008
	Samstagem	Grid injection	Digester	96%	PSA	Activated carbon	55	1997
	Luzern	Vehicle fuel+gas grid	Digester		PSA		140	2004
	Widnau	Grid injection		96%	PSA		240	
	Lavigny farm	Grid injection	Digester	96%	PSA		120	
	STEP	Grid injection		96%	PSA		240	
USA	Croton	Vehicle fuel	Landfill	90%	Selexol scrubbing	Selexol scrubbing	120	1993
	Fresh Kills	Grid injection	Landfill		Selexol scrubbing	Selexol scrubbing	13000	
	Puente Hills	Vehicle fuel	Landfill	96%	Membrane	Activated carbon	384	1993
	King County	Grid injection	Digester	98%	Water scrubbing	Water scrubbing	1429	1997
	McCarty Road	Grid injection	Landfill		Selexol scrubbing	Selexol scrubbing	9400	
	Huckabay Ridge	Grid injection	Digester				3200	2008
	Scenic View	Grid injection	Digester	97%	PSA	SulfaTreat	280	2007
	Bowerman	LNG	Landfill	97%	Cryogeny		1460	2007
	Rumpke	Grid injection	Landfill		PSA		17900	2007
	Emerald Dairy	Grid injection	Digester		Water scrubbing	Impregnated wood c	250	
	Bison energy	Grid injection	Digester	97%	PSA		19000	
	U of New Hampshire	Turbine		85%	PSA		10000	
Canada	Berthierville	Grid injection	Landfill	83%	Membrane+chemisorption	Activated Carbon	3300	2003
	Victoria	LNG	Landfill		Cryogeny		pilot	2000
Austria	Pucking	Grid injection	Digester	97%	PSA	Biological filter	10	2005
	SKS	CNG		94%	PSA		120	
Germany	Jameln	Vehicle fuel	Digester	96%	Selexol scrubbing	Selexol scrubbing	100	2006
	Kerpen	Grid injection	Digester		PSA	Activated carbon	500	2006
	Pliening	Grid injection	Digester		PSA	Activated carbon	1200	2006
	Schwandorf				Chemisorption		200	2007
	Straelen	Grid injection	Digester		PSA	Activated carbon		2006

Biogas upgrading plants

	Aachen	Grid injection	Digester		PSA	Activated carbon	1000	2006
	Dorsten	Grid injection	Digester		PSA	Activated carbon	1000	2008
	Postdam	Grid injection	Digester		PSA	Activated carbon	400	2008
	Augsburg	Grid injection	Digester		PSA	Activated carbon	1000	2008
	Muhlacker	Grid injection	Digester		PSA	Activated carbon	1000	2007
	Schwandorf	Grid injection	Digester		PSA	Activated carbon	2000	2008
	Ettlingen	Grid injection	Digester		PSA	Activated carbon	600	being built
	E.ON	Vehicle fuel+gas grid	Digester		PSA	Activated carbon	500	being built
	Essen	Vehicle fuel+H2 genera	Digester		PSA	Activated carbon	120	2008
	Westerstede	Grid injection	Digester		PSA	Activated carbon	500	2007
	Regensburg	Grid injection	Digester		PSA	Activated carbon	920	2006
	Rathernow	Grid injection	Digester		PSA	Activated carbon	500	2006
Iceland	Reykjavik	Vehicle fuel	Landfill		Water scrubbing	Water scrubbing	700	2005
Japan	Kobe	Vehicle fuel	Digester	97%	Water scrubbing	Water scrubbing	100	2004
	Kobe	Vehicle fuel	Digester	97%	Water scrubbing	Water scrubbing	600	2007
Norway	Fredrikstad	Vehicle fuel	Digester	95%	PSA		150	2001
Spain	Vacarisses	Vehicle fuel	Landfill	85%	Chemisorption	Activated carbon	100	2005
	Madrid	Vehicle fuel	Landfill	97%	Water scrubbing	Water scrubbing	4000	2007

Biogas upgrading technology suppliers

Company	Technology	Country
Cirmac (Purac, Lackeby Water AB)	Chemisorption, membrane, PSA	The Netherlands, Sweden
Malmberg Water AB	Water scrubbing	Sweden
Carbotech Gmbh	PSA, chemisorption	Germany
Prometheus Energy	Cryogenic technology	USA
Applied Filter Technology	PSA	USA
QuestAir	PSA	Canada
Xebec	PSA	Canada
Flotech	Water scrubbing	Sweden
Haase Energietechnik	Chemisorption	Germany
Gastreatment Services(Kiwa)	Cryogenic technology	The Netherlands
Air Liquide	Membrane	USA
Molecular Gate	PSA	USA
Metener	Water scrubbing	Finland
YIT Vatten & Miljöteknik	Water scrubbing, PSA	Sweden
GPM Väst	PSA	Sweden
Vaperma	Membrane	Canada
UOP	Membrane, selexol	USA
Biorega AB	Water scrubbing	Sweden
Acrion Technologies	Cryogenic technology	USA
MT-Energie	Chemisorption	Germany

Appendix B

Upgrading costs
according to Biomil AB

Parameter	amount	reference
raw biogas flow (m3/h)	240	assumed
capital cost		
upgrading equipment	$ 2,300,000	study 5
H2S scrubber	included	
installation and odour	included	
feed compressor	included	
injection, drying	included	
	$ 2,300,000	
operating cost (yearly)		
maintenance	$ 5,992	study 5
energy	$ 39,452	from assumptions
h2s scrubber	included	
personel	$ 3,000	study 5
material	$ 12,649	
	$ 61,094	
Methane recovery	98.0%	from assumptions
Input methane	61.0%	assumed
Availability	95%	from assumptions
Methane output (m3/yr)	1,193,974	
Energy output (GJ/yr)	45,085	

Loan	$2,300,000	
Interest Rate	8.0%	
Amortization	15	years

Expenses	Year 1
Principal	$84,708
Interest	$184,000
O&M	$61,094
total	$329,802

Production cost($/GJ): **$7.32**

Bromma plant
from study 1, PSA, built in 2001

Parameter	amount	reference
raw biogas flow (m3/h)	800	study 1
capital cost		
upgrading equipment	$ 1,984,000	study 1
H2S scrubber	included	
installation and odour	included	
feed compressor, drying	included	
injection	included	
	$ 1,984,000	
operating cost (yearly)		
human resources	included	
energy	included	
h2s scrubber	included	
chemicals	included	
other	$ 358,333	study 2, figure 30
	$ 358,333	
Methane recovery	98.5%	study 3
Input methane	60.0%	study 1
Availability	95%	study 2
Methane output (m3/yr)	3,934,642	
Energy output (GJ/yr)	148,574	

Loan	$1,984,000	
Interest Rate	8.0%	
Amortization	15	years

Expenses	Year 1
Principal	$73,070
Interest	$158,720
O&M	$358,333
total	$590,123

Production cost($/GJ): **$3.97**

Carbotech
Conventional PSA, quoted in 2008

Parameter	amount	reference
raw biogas flow (m3/h)	250	quote1
capital cost		
upgrading equipment	$ 1,280,000	quote 1
H2S scrubber	$ 154,950	from average and quote 1
installation and odour	$ 243,756	from assumptions and quote 1
feed compressor, drying	included	
injection	$ 416,000	quote 1
	$ 2,094,706	
operating cost (yearly)		
human resources	$ 7,500	from assumptions
energy(70kW)	$ 41,636	quote 1
h2s scrubber	$ 50,996	from average
chemicals	not needed	
other	$ 47,200	quote 1
	$ 147,332	
Methane recovery	92.3%	quote 1
Input methane	52.0%	quote 1
Availability	97%	study 2
Methane output (m3/yr)	1,019,579	
Energy output (GJ/yr)	38,500	

Loan	$2,094,706	
Interest Rate	8.0%	
Amortization	15	years

Expenses	Year 1
Principal	$77,147
Interest	$167,577
O&M	$147,332
total	$392,056

Production cost($/GJ): **$10.18**

Waste gas can be burned using a catalytic off gas combustion system from which energy can be recovered.

Kalmar biogas AB
Amine wash (COOAB) Purac AB, being built 2008

Parameter	amount	reference
raw biogas flow (m3/h)	200	study 5
capital cost		
upgrading equipment	$ 1,330,000	study 5
H2S scrubber, cleaning	included	
installation and odour	included	
feed compressor	included	
injection	included	
	$ 1,330,000	
operating cost (yearly)		
maintenance	$ 21,285	from assumptions
energy	$ 48,443	from assumptions
h2s scrubber	$ 44,596	from average
personel	$ 7,500	from assumptions
other	$ -	
	$ 121,824	
Methane recovery	99.8%	from assumptions
Input methane	61.0%	from assumptions
Availability	95%	from assumptions
Methane output (m3/yr)	1,013,253	
Energy output (GJ/yr)	38,261	

Loan	$1,330,000	
Interest Rate	8.0%	
Amortization	15	years

Expenses	Year 1
Principal	$48,983
Interest	$106,400
O&M	$121,824
total	$277,207

Production cost($/GJ): **$7.25**

King county south WWTP, Renton
non-renegenerative water scrubbing, built 1987

Parameter	amount	reference
raw biogas flow (m3/h)	1429	interview 2
capital cost		
upgrading equipment	$ 7,500,000	interview 2
H2S scrubber	not needed	
installation and odour	included	
feed compressor	included	
injection, drying	included	
	$ 7,500,000	
operating cost (yearly)		
maintenance	$ 126,734	from assumptions
energy	$ 311,570	interview 2
h2s scrubber	not needed	
personel	$ 15,000	interview 2
other	$ -	
	$ 453,305	
Methane recovery	98.0%	from assumptions
Input methane	60.0%	interview 2
Availability	95%	from assumptions
Methane output (m3/yr)	6,992,577	
Energy output (GJ/yr)	264,043	

Loan	$7,500,000	
Interest Rate	8.0%	
Amortization	15	years

Expenses	Year 1
Principal	$276,222
Interest	$600,000
O&M	$453,305
total	$1,329,526

Production cost($/GJ): **$5.04**

Metener system
Water wash without regeneration, 2006 quote

Parameter	amount	reference
raw biogas flow (m3/h)	200	quote 6
capital cost		
upgrading equipment	$ 1,152,000	quote 6
H2S scrubber	not needed	
installation and odour	$ 207,906	from assumptions
feed compressor	included	
injection	$ 100,000	from assumptions
	$ 1,459,906	
operating cost (yearly)		
human resources	$ 7,500	from assumptions
energy	$ 23,302	quote 6
h2s scrubber	not needed	
chemicals	not needed	
other	$ 21,285	from assumptions
	$ 52,087	
Methane recovery	98.5%	study 3
Input methane	61.0%	assumed
Availability	95%	study 2
Methane output (m3/yr)	1,000,055	
Energy output (GJ/yr)	37,762	

Loan	$1,459,906	
Interest Rate	8.0%	
Amortization	15	years

Expenses	Year 1
Principal	$53,768
Interest	$116,792
O&M	$52,087
total	$222,647

Production cost($/GJ): **$5.90**

This process consumes a significant amount of water (20l/m3 raw gas).
This translates into a daily amount of 60m3 of water.
Gas is dried when compressed (condensation removal).

Molecular gate
Conventional PSA, quoted in 2008

Parameter	amount		reference
raw biogas flow (m3/h)		240	quote 7
capital cost			
upgrading equipment	$	485,000	quote 7
H2S scrubber	$	148,680	from average
installation and odour	$	207,906	from assumptions
feed compressor	$	140,000	quote 7
injection	$	100,000	from assumptions
	$	1,081,586	
operating cost (yearly)			
human resources	$	7,500	from assumptions
energy(142kW)	$	84,462	quote 7
h2s scrubber	$	44,596	from average
chemicals	not needed		
other	$	21,285	from assumptions
	$	157,843	
Methane recovery		90.0%	quote 7
Input methane		61.0%	quote 7
Availability		97%	study 2
Methane output (m3/yr)		1,119,591	
Energy output (GJ/yr)		42,276	

Loan	$1,081,586	
Interest Rate	8.0%	
Amortization	15	years

Expenses	Year 1
Principal	$39,834
Interest	$86,527
O&M	$157,843
total	$284,204

Production cost($/GJ): **$6.72**

Waste gas can be burned so that energy is not lost.
Water is removed from gas before PSA (after compression).

NSR Helsingborg
water scrubbing with regeneration, being built 2008

Parameter	amount	reference
raw biogas flow (m3/h)	650	study 5
capital cost		
upgrading equipment	$ 2,050,000	study 5
H2S scrubber	included	
installation and odour	included	
feed compressor	included	
injection, drying	included	
	$ 2,050,000	
operating cost (yearly)		
maintenance	$ 57,647	from assumptions
energy	$ 119,574	from assumptions
h2s scrubber	$ 120,780	from average
personel	$ 20,313	from assumptions
other	$ -	
	$ 318,314	
Methane recovery	98.0%	from assumptions
Input methane	61.0%	from assumptions
Availability	95%	from assumptions
Methane output (m3/yr)	3,233,680	
Energy output (GJ/yr)	122,105	

Loan	$2,050,000	
Interest Rate	8.0%	
Amortization	15	years

Expenses	Year 1
Principal	$75,501
Interest	$164,000
O&M	$318,314
total	$557,814

Production cost($/GJ): **$4.57**

This plant would need a considerable flow of water to operate, roughly 22m3 water per day.

QuestAir
rapid cycle 1 stage psa, quoted in 2008

Parameter	amount		reference
raw biogas flow (m3/h)		240	quote 10
capital cost			
upgrading equipment	$	341,000	quote 10
H2S scrubber	$	148,680	from average
installation and odour	$	515,350	quote 10+assumptions
feed compressor, drying	$	125,000	quote 10
injection	$	46,000	quote 10
	$	1,176,030	
operating cost (yearly)			
maintenance	$	17,000	quote 10
energy	$	40,000	quote 10
h2s scrubber	$	44,596	from average
chemicals	not needed		
utilities	$	9,000	quote 10
	$	110,596	
Methane recovery		83.0%	quote 10
Input methane		60.8%	quote 10
Availability		97%	study 2
Methane output (m3/yr)		1,029,126	
Energy output (GJ/yr)		38,860	

Loan	$1,176,030	
Interest Rate	8.0%	
Amortization	15	years

Expenses	Year 1
Principal	$43,313
Interest	$94,082
O&M	$110,596
total	$247,991

Production cost($/GJ): **$6.38**

The output gas will contain 4% CO2, which is above the 2% limit set by Terasen.
Waste gas can be burned using a catalytic off gas combustion system from which energy can be recovered.

QuestAir
rapid cycle 2 stages psa, quoted in 2008

Parameter	amount		reference
raw biogas flow (m3/h)		240	quote 10
capital cost			
upgrading equipment	$	700,000	quote 10
H2S scrubber	$	148,680	from average
installation and odour	$	515,350	quote 10+assumptions
feed compressor, drying	$	125,000	quote 10
injection	$	46,000	quote 10
	$	1,535,030	
operating cost (yearly)			
maintenance	$	22,000	quote 10
energy	$	60,000	quote 10
h2s scrubber	$	44,596	from average
chemicals	not needed		
utilities	$	12,000	quote 10
	$	138,596	
Methane recovery		95.0%	quote 10
Input methane		60.8%	quote 10
Availability		97%	study 2
Methane output (m3/yr)		1,177,916	
Energy output (GJ/yr)		44,479	

Loan	$1,535,030	
Interest Rate	8.0%	
Amortization	15	years

Expenses	Year 1
Principal	$56,534
Interest	$122,802
O&M	$138,596
total	$317,933

Production cost($/GJ): **$7.15**

The output gas will contain 3.8% CO2, which is above the 2% limit set by Terasen.
Waste gas can be burned using a catalytic off gas combustion system from which energy can be recovered.

Scenic view farm
rapid cycle psa, built in 2007

Parameter	amount	reference
raw biogas flow (m3/h)	220	interview 5
capital cost		
upgrading equipment	$ 900,000	interview 1
H2S scrubber	included	
installation and odour	included	
feed compressor, drying	included	
injection	included	
	$ 900,000	
operating cost (yearly)		
human resources	included	
energy	included	
h2s scrubber	included	
chemicals	included	
other	$ 90,000	interview 1
	$ 90,000	
Methane recovery	87.0%	interview 1
Input methane	65.0%	interview 1
Availability	98%	interview 1
Methane output (m3/yr)	1,068,035	
Energy output (GJ/yr)	40,329	

Loan	$900,000	
Interest Rate	8.0%	
Amortization	15	years

Expenses	Year 1
Principal	$33,147
Interest	$72,000
O&M	$90,000
total	$195,147

Production cost($/GJ): **$4.84**

Waste gas can be burned so that energy is not lost.

Upgrading costs
according to sgc report 142, study 2, 2003

Parameter	amount	reference
raw biogas flow (m3/h)	240	assumed
capital cost		
upgrading equipment	included	
H2S scrubber	included	
installation and odour	included	
feed compressor	included	
injection, drying	included	
	$ -	
operating cost (yearly)		
O&M	included	
energy	included	
h2s scrubber	included	
chemicals	included	
utilities	included	
	$ -	
Methane recovery	included	
Input methane	included	
Availability	included	
Methane output (m3/yr)	included	
Energy output (GJ/yr)	included	
Loan	included	
Interest Rate	6%	
Amortization	15	years

Expenses	Year 1
Principal	included
Interest	included
O&M	included
total	included

Production cost($/GJ): **$6.95**

This is an average of swedish plants.

Wrams Gunnarstorp biogas plant
Carbotech PSA, built 2006

Parameter	amount	reference
raw biogas flow (m3/h)	500	study 5
capital cost		
upgrading equipment	$ 2,000,000	study 5
H2S scrubber	included	
installation and odour	included	
feed compressor, drying	included	
injection	included	
	$ 2,000,000	
operating cost (yearly)		
maintenance	$ 44,344	from assumptions
energy	$ 82,782	from assumptions
h2s scrubber	$ 92,908	from average
personel	$ 15,625	from assumptions
other	$ -	
	$ 235,659	
Methane recovery	92.3%	quote 1
Input methane	61.0%	from assumptions
Availability	97%	from assumptions
Methane output (m3/yr)	2,392,089	
Energy output (GJ/yr)	90,326	

Loan	$2,000,000	
Interest Rate	8.0%	
Amortization	15	years

Expenses	Year 1
Principal	$73,659
Interest	$160,000
O&M	$235,659
total	$469,318

Production cost($/GJ): **$5.20**

This plant would need a considerable flow of water to operate.

Uppsala upgrading plant
Water wash with regeneration, from study 1, built in 1997-2002

Parameter	amount	reference
raw biogas flow (m3/h)	200	study 1
capital cost		
upgrading equipment	$ 1,376,000	study 1
H2S scrubber	included	
installation and odour	included	
feed compressor	included	
injection, drying	included	
	$ 1,376,000	
operating cost (yearly)		
human resources	included	
energy	included	
h2s scrubber	included	
chemicals	included	
other	$ 66,667	study 2, figure 30
	$ 66,667	
Methane recovery	98.5%	study 3
Input methane	66.5%	study 1
Availability	95%	study 2
Methane output (m3/yr)	1,090,224	
Energy output (GJ/yr)	41,167	

Loan	$1,376,000	
Interest Rate	8.0%	
Amortization	15	years

Expenses	Year 1
Principal	$50,677
Interest	$110,080
O&M	$66,667
total	$227,424

Production cost($/GJ): **$5.52**

Helsingborg WWTP
Water scrubber, being built 2008

Parameter	amount	reference
raw biogas flow (m3/h)	250	study 5
capital cost		
upgrading equipment	$ 1,820,000	study 5
H2S scrubber	included	
installation and odour	included	
feed compressor	included	
injection, drying	included	
	$ 1,820,000	
operating cost (yearly)		
maintenance	$ 21,285	from assumptions
energy	$ 45,990	from assumptions
h2s scrubber	not needed	
personel	$ 7,500	from assumptions
other	$ -	
	$ 74,775	
Methane recovery	98.0%	from assumptions
Input methane	61.0%	from assumptions
Availability	95%	from assumptions
Methane output (m3/yr)	1,243,723	
Energy output (GJ/yr)	46,963	

Loan	$1,820,000	
Interest Rate	8.0%	
Amortization	15	years

Expenses	Year 1
Principal	$67,030
Interest	$145,600
O&M	$74,775
total	$287,405

Production cost($/GJ): **$6.12**

This plant would need a considerable flow of water to operate.

Assumptions, upgrading price evaluation

Economical assumptions

Loan interest rate	8%	
Amortization (years)	15	
Cashdown	20%	
Inflation	0%	
Cost of electricity	0.07	$/kWh

Other assumptions

Methane

methane content of raw biogas	61%	
density CH4 at 15 celsius	0.68	kg/nm3
Higher heating value of methane	55.5	MJ/kg
	37.8	MJ/nm3

Plants

availability of psa plants	97%	study 2
general availability:	95%	study 2
general methane recovery:	98%	study 3
methane recovery chemisorption:	99.8%	study 3

Energy use

general energy use, %of energy content of biomethane:	4.5%	study 3
Electricity use, PSA (kWh/nm3 biogas)	0.27	study 5
Electricity use, water wash (kWh/nm3 biogas)	0.30	study 5
Electricity use, chemisorption (kWh/nm3 biogas)	0.40	study 5

This does not include 50% of the 0.55kWh/nm3 biogas of heat needed for regeneration.
It is assumed 50% of the heat needed is available.

For a 240m3/h raw biogas plant:

Costs for installation

Cost of civil works and installation:	$	103,575	study 4	
Odorization system:	$	15,350	study 1+quote 8	
Pipe + installation + excavation 8 feet + backfilling	$	88,981	study 4	400m pipeline 3/4"
total	$	207,906		

Feed compressor + condensate removal:	$	140,000	quote 9
Controls, injection unit, monitoring:	$	100,000	interview 4

flow rate sensor, specific gravity sensor, remote monitoring, computer and valves
no need for further pressurization

Other maintenance	odor/yr:	$	1,785	quote 8
	general maintenance:	$	19,500	quote 10
	total	$	21,285	

Man power needed/yr: 1.5h/d at 20$/h	$	7,500	study 2

For larger plants, the cost estimates above will be adjusted proportionally to size.
Shipping costs are not included
Other currencies are converted to CAN$ using current exchange rate.

H2S scrubbing costs 2500ppm to 100ppm for a 240nm3/h biogas flow

Amount of H2S to remove (kg/year) 34,786
Operating costs is assumed to be essentially cost of chemical used + disposal cost.
Assumed quantity of substrate digested (m3/yr) 38,750

source	Technology	capital cost ($)	price of chemical ($/yr)	disposal cost ($/yr) 60$/ton, density=1	operating cost ($/yr)	reference
Varec	iron sponge	100,000	26,785	4,860	31,645	quote 2
Laholm	proprietary chemical reaction				6,000	study 1
Eco-Tec	proprietary chemical reaction	450,000	22,959	4,860	27,819	quote 3
Sulfatreat	proprietary chemical reaction	40,000	100,279	5,239	105,518	quote 4
Kemira water	iron chloride dosing		31,000	none	31,000	quote 5
Biomil	iron chloride dosing	23,400	25,188	none	25,188	Biomil
Questair (Sulfatreat)	proprietary chemical reaction	130,000	80,000	5,000	85,000	quote 10
Average		**148,680**			**44,596**	

References for evaluation of upgrading cost

Studies

1 Adding gas from biomass to the gas grid
2 Evaluation of upgrading techniques for biogas
3 Biogas upgrading and utilisation as vehicle fuel
4 Kelly Saikkonen, Master's Thesis
5 Biomil AB

Interviews

1 Norma Mcdonald, Phase 3 Renewables, March 21st 2008
2 Rick Butler, King County wwtp, April 4th 2008
3 Ed Wheelis, Puente Hills Landfill, March 21st 2008
4 Curtis Cope, Michigan Gas Utilities, April 30th 2008
5 Andrew Hall, QuestAir, 13/05/2008, by email

Quotes

1	Carbotech	by email with pdf
2	Varec	by email with pdf
3	Eco-Tec	by email with pdf
4	Sulfatreat	by email with pdf
5	Kemira Water	by email with Biomil
6	Metener	by email with pdf
7	Molecular Gate	by email with pdf'
8	T-Line	by email with pdf and by phone
9	Molecular Gate	by email with pdf
10	Questair	by email with pdf

Appendix C

Economics Biogas Production

Estimated Project Cost	$2,130,450			
Grant	$0			
Cashdown	$0			
Debt	$2,130,450			
Debt/Equity Ratio	1.00			

Expenses

Startup		$ 75,000		
Lab Analysis			$7,500	$3,750
AD plant electricity	3%			$9,800
Insurance	0.25%			$5,326
General Maintenance	1.00%			$21,305
Labour	2	hours/day		$14,600
Debt service				$ 267,711
	Total			*$322,492*

production cost per GJ $ 7.72

Financing

Estimated Project Cost	$2,130,450	
Cashdown	$0	
Grants	$0	
Debt	$2,130,450	
Loan #1 (Engineering & Civil Work)	$1,213,750	
Interest Rate	7.0%	
Amortization	20	years
Loan #2 (General Equipment)	$772,700	
Interest Rate	8.0%	
Amortization	10	years
Loan #3 (Biogas equipment)	$144,000	$2,130,450
Interest Rate	10.0%	
Amortization	5	years

Debt Service	Year 1	Year 2	Year 3	Year 4	Year 5	Year 6	Year 7	Year 8	Year 9	Year 10	Year 11	Year 12	Year 13	Year 14	Year 15	Year 16	Year 17	Year 18	Year 19	Year 20
Loan 1																				
Principal	$29,607	$31,679	$33,897	$36,270	$38,809	$41,525	$44,432	$47,542	$50,870	$54,431	$58,241	$62,318	$66,680	$71,348	$76,342	$81,686	$87,404	$93,523	$100,069	$107,074
Interest	$84,963	$82,890	$80,672	$78,300	$75,761	$73,044	$70,137	$67,027	$63,699	$60,138	$56,328	$52,251	$47,889	$43,221	$38,227	$32,883	$27,165	$21,047	$14,500	$7,495
Loan 2																				
Principal	$53,339	$57,606	$62,215	$67,192	$72,567	$78,373	$84,642	$91,414	$98,727	$106,625	$53,339	$57,606	$62,215	$67,192	$72,567	$78,373	$84,642	$91,414	$98,727	$106,625
Interest	$61,816	$57,549	$52,940	$47,963	$42,588	$36,782	$30,513	$23,741	$16,428	$8,530	$61,816	$57,549	$52,940	$47,963	$42,588	$36,782	$30,513	$23,741	$16,428	$8,530
Loan 3																				
Principal	$23,587	$25,946	$28,540	$31,394	$34,533	$23,587	$25,946	$28,540	$31,394	$34,533	$23,587	$25,946	$28,540	$31,394	$34,533	$23,587	$25,946	$28,540	$31,394	$34,533
Interest	$14,400	$12,041	$9,447	$6,593	$3,453	$14,400	$12,041	$9,447	$6,593	$3,453	$14,400	$12,041	$9,447	$6,593	$3,453	$14,400	$12,041	$9,447	$6,593	$3,453
Debt Payment	*$267,711*	*$267,711*	*$267,711*	*$267,711*	*$267,711*	*$267,711*	*$267,711*	*$267,711*	*$267,711*	*$267,711*	*$267,711*	*$267,711*	*$267,711*	*$267,711*	*$267,711*	*$267,711*	*$267,711*	*$267,711*	*$267,711*	*$267,711*

Electrigaz

Civil Works	**480,000.00**
Preparation of Site	100,000.00
Fence and Gate	on site
Street Works	on site
Civil Works in general	380,000.00
Mixing tank	**53,000.00**
Concrete tank	15,000.00
Roof	included
Leak-/Over-/Underpressuretest	included
2 mixer, submerged	10,000.00
Insulation, Tankwall, roof uninsulated	included
Cage Ladder, Platform, Viewing Glass	included
Assembly, Documentation	included
Flanges	8,000.00
Solid feeder	20,000.00
Pasteurizer	**45,000.00**
Foundation, concrete,	10,000.00
Steel Tank, glass coated	30,000.00
Roof	included
Leak-/Over-/Underpressuretest	included
1 mixer, submerged	5,000.00
Insulation, Tankwall, roof uninsulated	included
Cage Ladder, Platform, Viewing Glass	included
Assembly, Documentation	included
Flanges	included
Digester	**580,000.00**
Concrete tank	500,000.00
Leak-/Over-/Underpressuretest	included
1 mixer, top mounted	65,000.00
Insulation, Tankwall, roof uninsulated	included
Cage Ladder, Platform, Viewing Glass	included
Over-/Under pressure Valve and Safety Equipment	included
Assembly, Documentation	included
Flanges	15,000.00
Storage Tank	**290,000.00**
Manure pit double membrane cover	290,000.00
Gas System	**34,000.00**
Emergency Flare	20,000.00
Gas Blower	10,000.00
Condensate Tank incl. Equipment	4,000.00
Control Room Building	**50,000.00**
for pumps and heat exchanger	35,000.00
electrical devices, office	15,000.00
Equipment	**142,000.00**
1 Pump for CHP	0.00
1 Pump from Digester to HE	12,000.00
Truck Weigh	30,000.00
Heat Exchanger	50,000.00
Pipes	50,000.00
Boiler	**90,000.00**

Boiler	60,000.00
gas system, safety devices	included
shipping cost	included
Heat for Start-up Operation	30,000.00
Gas, Heating System Installations	**115,000.00**
Electrical Equipment	50,000.00
Process Control Equipment	30,000.00
Measurement Devices	20,000.00
Heating Distribution, internally	15,000.00
Engineering	**115,000.00**
Permitting management	**35,000.00**
Sum, net	**2,029,000.00**
Contingency (5%)	**101,450.00**
Total Cost	**2,130,450.00**

Project Cost Breakdown:	
Engineering	6%
Civil Work	51%
General Equipment	36%
Biogas Equipment	7%

Feedstock

Substrate #1	cow slurry	
Annual Quantity	32000	m3
Substrate #2	grease trap fat	
Annual Quantity	3600	tonnes
Substrate #3	kitchen waste	
Annual Quantity	2200	tonnes

Design parameters

Boiler Efficiency	80%
Boiler availability	97%
Parasitic heat	11%
Parasitic electricity	3%

Economical assumptions

Grants	none	
Cashdown	none	
Electricity Purchased	$70.00	/MWh
Labour	$20	/hour
	2h/day	
Insurance	0.5%	of capital cost
Maintenance	1.0%	of capital cost
Initial lab analysis	$7,500	
no inflation		
no digestate management cost		

Electrigaz

Appendix D

	Year 1	*Year 2*	*Year 3*	*Year 4*	*Year 5*	*Year 6*	*Year 7*	*Year 8*	*Year 9*	*Year 10*	*Year 11*	*Year 12*	*Year 13*	*Year 14*	*Year 15*	*Year 16*	*Year 17*	*Year 18*	*Year 19*	*Year 20*
Revenue/Savings																				
Biomethane	$432,273	$438,757	$445,338	$452,018	$458,798	$465,680	$472,666	$479,756	$486,952	$494,256	$501,670	$509,195	$516,833	$524,585	$532,454	$540,441	$548,548	$556,776	$565,128	$573,604
GHG carbon credits	$0	$0	$0	$0	$0	$0	$0	$0	$0	$0	$0	$0	$0	$0	$0	$0	$0	$0	$0	$0
Manure spreading	$5,000	$5,150	$5,305	$5,464	$5,628	$5,796	$5,970	$6,149	$6,334	$6,524	$6,720	$6,921	$7,129	$7,343	$7,563	$7,790	$8,024	$8,264	$8,512	$8,768
Fertilizer cost	$3,000	$3,090	$3,183	$3,278	$3,377	$3,478	$3,582	$3,690	$3,800	$3,914	$4,032	$4,153	$4,277	$4,406	$4,538	$4,674	$4,814	$4,959	$5,107	$5,261
Bedding	$40,000	$41,200	$42,436	$43,709	$45,020	$46,371	$47,762	$49,195	$50,671	$52,191	$53,757	$55,369	$57,030	$58,741	$60,504	$62,319	$64,188	$66,114	$68,097	$70,140
Gate fees	$192,000	$197,760	$203,693	$209,804	$216,098	$222,581	$229,258	$236,136	$243,220	$250,516	$258,032	$265,773	$273,746	$281,958	$290,417	$299,130	$308,104	$317,347	$326,867	$336,673
Total	$ 672,273	$ 685,957	$ 699,954	$ 714,273	$ 728,920	$ 743,906	$ 759,238	$ 774,925	$ 790,977	$ 807,402	$ 824,210	$ 841,411	$ 859,016	$ 877,034	$ 895,476	$ 914,353	$ 933,677	$ 953,459	$ 973,711	$ 994,446
* Biomethane sold at	$10.70 per GJ																			
Expenses																				
Gas cleaning material	$80,000	$82,400	$84,872	$87,418	$90,041	$92,742	$95,524	$98,390	$101,342	$104,382	$107,513	$110,739	$114,061	$117,483	$121,007	$124,637	$128,377	$132,228	$136,195	$140,280
Upgrading electricity	$40,000	$41,200	$42,436	$43,709	$45,020	$46,371	$47,762	$49,195	$50,671	$52,191	$53,757	$55,369	$57,030	$58,741	$60,504	$62,319	$64,188	$66,114	$68,097	$70,140
Lab Analysis	$3,750	$3,863	$3,978	$4,098	$4,221	$4,347	$4,478	$4,612	$4,750	$4,893	$5,040	$5,191	$5,347	$5,507	$5,672	$5,842	$6,018	$6,198	$6,384	$6,576
AD plant electricity	$10,167	$10,472	$10,786	$11,110	$11,443	$11,786	$12,140	$12,504	$12,879	$13,265	$13,663	$14,073	$14,496	$14,930	$15,378	$15,840	$16,315	$16,804	$17,308	$17,828
Insurance	$8,632	$8,891	$9,158	$9,433	$9,716	$10,007	$10,307	$10,617	$10,935	$11,263	$11,601	$11,949	$12,308	$12,677	$13,057	$13,449	$13,852	$14,268	$14,696	$15,137
General Maintenance	$51,794	$53,348	$54,948	$56,597	$58,294	$60,043	$61,845	$63,700	$65,611	$67,579	$69,607	$71,695	$73,846	$76,061	$78,343	$80,693	$83,114	$85,607	$88,176	$90,821
Labour	$14,600	$15,038	$15,489	$15,954	$16,432	$16,925	$17,433	$17,956	$18,495	$19,050	$19,621	$20,210	$20,816	$21,441	$22,084	$22,746	$23,429	$24,132	$24,856	$25,601
Debt service	$440,015	$440,015	$440,015	$440,015	$440,015	$440,015	$440,015	$440,015	$440,015	$440,015	$440,015	$440,015	$440,015	$440,015	$440,015	$440,015	$440,015	$440,015	$440,015	$440,015
Total	$648,958	$655,227	$661,683	$668,333	$675,183	$682,238	$689,504	$696,989	$704,698	$712,639	$720,817	$729,241	$737,918	$746,855	$756,061	$765,542	$775,308	$785,366	$795,727	$806,398
Net cashflow	$23,314	$30,730	$38,271	$45,939	$53,738	$61,668	$69,734	$77,936	$86,278	$94,763	$103,392	$112,170	$121,097	$130,178	$139,415	$148,811	$158,370	$168,093	$177,984	$188,048
Capital Cost Allowance	$863,231	$1,294,847	$647,423	$323,712	$161,856	$80,928	$40,464	$20,232	$10,116	$5,058	$2,529	$1,264	$632	$316	$158	$79	$40	$20	$10	$5
Net Income after CCA	-$839,917	-$1,264,117	-$609,153	-$277,772	-$108,118	-$19,260	$29,270	$57,704	$76,162	$89,705	$100,863	$110,905	$120,465	$129,862	$139,257	$148,732	$158,330	$168,073	$177,975	$188,043
Tax (credit if negative)	-$251,975	-$379,235	-$182,746	-$83,332	-$32,435	-$5,778	$8,781	$17,311	$22,849	$26,911	$30,259	$33,272	$36,140	$38,959	$41,777	$44,620	$47,499	$50,422	$53,392	$56,413
After Tax Earnings	$275,289	$409,965	$221,017	$129,271	$86,173	$67,446	$60,953	$60,625	$63,430	$67,851	$73,133	$78,898	$84,958	$91,220	$97,638	$104,192	$110,871	$117,671	$124,592	$131,635

Financing

Estimated Project Cost	$3,452,925
Cashdown	$168,342
Grants	$168,342
Debt	$3,116,242
Loan #1 (Engineering & Civil Work)	$1,471,651
Interest Rate	7.0%
Amortization	20 years
Loan #2 (General Equipment)	$1,156,568
Interest Rate	8.0%
Amortization	10 years
Loan #3 (Biogas equipment)	$488,023
Interest Rate	10.0%
Amortization	5 years

Debt Service	Year 1	Year 2	Year 3	Year 4	Year 5	Year 6	Year 7	Year 8	Year 9	Year 10	Year 11	Year 12	Year 13	Year 14	Year 15	Year 16	Year 17	Year 18	Year 19	Year 20
Loan 1																				
Principal	$35,898	$38,411	$41,099	$43,976	$47,055	$50,349	$53,873	$57,644	$61,679	$65,997	$70,617	$75,560	$80,849	$86,508	$92,564	$99,043	$105,976	$113,395	$121,332	$129,826
Interest	$103,016	$100,503	$97,814	$94,937	$91,859	$88,565	$85,040	$81,269	$77,234	$72,917	$68,297	$63,354	$58,065	$52,405	$46,350	$39,870	$32,937	$25,519	$17,581	$9,088
Loan 2																				
Principal	$79,837	$86,224	$93,122	$100,572	$108,618	$117,307	$126,692	$136,827	$147,773	$159,595	$79,837	$86,224	$93,122	$100,572	$108,618	$117,307	$126,692	$136,827	$147,773	$159,595
Interest	$92,525	$86,138	$79,240	$71,791	$63,745	$55,056	$45,671	$35,536	$24,589	$12,768	$92,525	$86,138	$79,240	$71,791	$63,745	$55,056	$45,671	$35,536	$24,589	$12,768
Loan 3																				
Principal	$79,937	$87,931	$96,724	$106,396	$117,036	$79,937	$87,931	$96,724	$106,396	$117,036	$79,937	$87,931	$96,724	$106,396	$117,036	$79,937	$87,931	$96,724	$106,396	$117,036
Interest	$48,802	$40,809	$32,016	$22,343	$11,704	$48,802	$40,809	$32,016	$22,343	$11,704	$48,802	$40,809	$32,016	$22,343	$11,704	$48,802	$40,809	$32,016	$22,343	$11,704
Debt Payment	*$440,015*	*$440,015*	*$440,015*	*$440,015*	*$440,015*	*$440,015*	*$440,015*	*$440,015*	*$440,015*	*$440,015*	*$440,015*	*$440,015*	*$440,015*	*$440,015*	*$440,015*	*$440,015*	*$440,015*	*$440,015*	*$440,015*	*$440,015*

Electrigaz

Appendix E

Equipment, case study

Civil Works	**340,000.00**
Preparation of Site	30,000.00
Fence and Gate	on site
Street Works	on site
Civil Works in general - digester operation	100,000.00
Biogas upgrading installation	160,000.00
Commissioning support	50,000.00
Receiving pit	**212,000.00**
Concrete tank	40,000.00
Roof	included
Insulation	included
Biofilter	40,000.00
2 mixers, submerged	20,000.00
Shredder	50,000.00
Heat Exchanger	35,000.00
Flanges	12,000.00
Cutting Pump	15,000.00
Mixing tank	**107,000.00**
Concrete tank	60,000.00
Roof	included
Insulation	included
2 mixers, submerged	20,000.00
Flanges	12,000.00
Pump	15,000.00
Pasteurizer	**65,000.00**
Foundation, concrete,	8,000.00
Steel Tank, glass coated	35,000.00
Pump	10,000.00
1 mixer, submerged	8,000.00
Insulation, Tankwall, roof uninsulated	included
Cage Ladder, Platform, Viewing Glass	included
Assembly, Documentation	included
Flanges	4,000.00
Digester	**610,000.00**
Concrete tank 3600m3	525,000.00
Foundation	included
Leak-/Over-/Underpressuretest	included
1 mixer, top mounted	65,000.00
Insulation, Tankwall, roof uninsulated	included
Cage Ladder, Platform, Viewing Glass	included
Over-/Under pressure Valve and Safety Equipment	included
Assembly, Documentation	included
Flanges	20,000.00
Secondary digester & Covers	**370,000.00**
Concrete tank & pillar	300,000.00
Wooden rafters	included
Double membrane roof	included
Flanges	included
Lagoon cover	55,000.00
Drop in mixers	15,000.00

Equipment, case study

Gas System	**127,000.00**
Emergency Flare	100,000.00
Gas Blower	15,000.00
Flame trap	6,000.00
Condensate Tank incl. Equipment	6,000.00
Control Room Building	**75,000.00**
for pumps and heat exchanger	45,000.00
electrical devices, office	30,000.00
Equipment	**135,000.00**
1 Pump from Digester to HE	15,000.00
Truck Weigh	30,000.00
Digester heat Exchanger	40,000.00
Pipes	50,000.00
Boiler	**50,000.00**
Boiler	50,000.00
gas system, safety devices	included
shipping cost	included
Gas, Heating System Installations	**135,000.00**
Electrical Equipment	50,000.00
Process Control Equipment	50,000.00
Measurement Devices	20,000.00
Heating Distribution, internally	15,000.00
Manure management	**100,000.00**
Manure separator	80,000.00
Solids conveyor	20,000.00
Biogas upgrading equipment	**616,000.00**
Pretreatment system	63,000.00
Sulfur removal	150,000.00
Feed compressor	125,000.00
Post compressor treatment	13,000.00
1 stage PSA system	175,000.00
Exhaust blower	90,000.00
Simple biomethane injection equipment	**66,500.00**
Specific gravity meter	20,000.00
Flow computer	25,000.00
Rotary flow meter	1,500.00
Regulator	1,500.00
Pipes	2,000.00
Valve + solenoid	1,500.00
Odour, sampling port	15,000.00
Engineering	**200,000.00**
Permitting management	**80,000.00**
Sum, net	**3,288,500.00**
Contingency (5%)	**164,425.00**
Total Cost	**3,452,925.00**

Appendix F

ARTICLE 12
GAS AND HYDROCARBON LIQUIDS QUALITY

12.01 Obligation of Westcoast. Westcoast shall not be obligated to take delivery from or for the account of a Shipper at a Receipt Point of any raw gas, residue gas or Hydrocarbon Liquids which do not comply with the applicable quality specifications set out in this Article.

12.02 Raw Gas, McMahon Processing Plant. Raw gas delivered to Westcoast at a Receipt Point for processing at the McMahon Processing Plant shall:

(a) be free of sand, gum, dust, oils and other impurities or objectionable substances which may, in the judgement of Westcoast, adversely affect the delivery to or subsequent handling thereof by Westcoast;

(b) not contain water vapour in excess of 65 milligrams per cubic meter, as determined by dewpoint apparatus approved by the Bureau of Mines of the United States, but in no case need the raw gas be dehydrated to a water vapour dewpoint of less than minus 12°C at the delivery pressure;

(c) be free of water in liquid form;

(d) have a temperature not exceeding 54°C;

(e) be as free of oxygen as the Shipper, by making every reasonable effort (which the Shipper undertakes to do), is able to make it, but in any event not contain more than one percent by volume of oxygen; and

(f) after removal of hydrogen sulphide and carbon dioxide, have a total heating value of not less than 36.00 megajoules per cubic meter.

12.03 Raw Gas, Fort Nelson and Pine River Processing Plant. Raw gas delivered to Westcoast at a Receipt Point for processing at the Fort Nelson Processing Plant or the Pine River Processing Plant shall:

(a) be free of sand, gum, dust, oils and other impurities or objectionable substances which may, in the judgement of Westcoast, adversely affect the delivery to or subsequent handling thereof by Westcoast;

(b) not have a water vapour dewpoint in excess of minus 10°C, as determined by dewpoint apparatus approved by the Bureau of Mines of the United States;

(c) be free of water in liquid form;

(d) not contain hydrocarbons in liquid form and not have a hydrocarbon dewpoint in excess of minus 9°C at a pressure of 5 516 kilopascals gauge, except where otherwise specified in a Service Agreement;

(e) have a temperature not exceeding 54°C;

(f) be as free of oxygen as the Shipper, by making every reasonable effort (which the Shipper undertakes to do), is able to make it, but in any event not contain more than one percent by volume of oxygen; and

(g) after removal of hydrogen sulphide and carbon dioxide, have a total heating value of not less than 36.00 megajoules per cubic meter.

12.04 Raw Gas, Sikanni Processing Plant. Raw gas delivered to Westcoast at a Receipt Point for processing at the Sikanni Processing Plant shall:

(a) be free of sand, gum, dust, oils and other impurities or objectionable substances which may, in the judgement of Westcoast, adversely affect the delivery to or subsequent handling thereof by Westcoast;

(b) on a steady state two phase flow basis, not contain more water than would result in the removal of more than 15 litres of water per $10^3 m^3$ of raw gas at the plant inlet, averaged over a 24 hour period;

(c) contain less than 250 parts per million of gaseous hydrogen sulphide and less than 7,000 parts per million of total acid gas;

(d) be as free of oxygen as the Shipper, by making every reasonable effort (which the Shipper undertakes to do), is able to make it, but in any event not contain more than one percent by volume of oxygen; and

(e) after removal of hydrogen sulphide and carbon dioxide, have a total heating value of not less than 36.00 megajoules per cubic meter.

12.05 Hydrocarbon Liquids. Hydrocarbon Liquids delivered into the Pipeline System at a Receipt Point with raw gas which is to be processed at the McMahon Processing Plant or the Fort Nelson Processing Plant shall:

(a) be free of sand, gum, dust and other impurities or objectionable substances which may, in the judgment of Westcoast, adversely affect the delivery to or the subsequent transportation and handling thereof by Westcoast; and

(b) not contain any free water or emulsified water.

12.06 Residue Gas at Receipt Points. Residue gas delivered to Westcoast by or for the account of a Shipper at a Receipt Point shall:

(a) not contain sand, dust, gums, oils and other impurities or other objectionable substances in such quantities as may be injurious to pipelines or may interfere with the transmission or commercial utilization of the gas;

(b) not contain more than six milligrams per cubic meter of hydrogen sulphide;

(c) not contain water in the liquid phase and not contain more than 65 milligrams per cubic meter of water vapour;

(d) be free of hydrocarbons in liquid form and not have a hydrocarbon dewpoint in excess of minus 9°C at the delivery pressure;

(e) not contain more than 23 milligrams per cubic meter of total sulphur;

(f) not contain more than two percent by volume of carbon dioxide;

(g) be as free of oxygen as Shipper can keep it through the exercise of all reasonable precautions and shall not in any event contain more than 0.4 percent by volume of oxygen;

(h) have a temperature not exceeding 54°C; and

(i) have a total heating value of not less than 36.00 megajoules per cubic meter.

12.07 Residue Gas at Delivery Points. Residue gas delivered by Westcoast to or for the account of a Shipper at a Delivery Point at which the Pipeline System interconnects with the pipeline facilities of a Receiving Party shall:

(a) not contain sand, dust, gums, oils and other impurities or other objectionable substances in such quantities as may be injurious to pipelines or may interfere with the transmission or commercial utilization of the gas;

(b) not contain more than six milligrams per cubic meter of hydrogen sulphide;

(c) be free of water and hydrocarbons in liquid form and not contain more than 65 milligrams per cubic meter of water vapour;

(d) not contain more than 115 milligrams per cubic meter of total sulphur;

(e) not contain more than two percent by volume of carbon dioxide;

(f) be as free of oxygen as Westcoast can keep it through the exercise of all reasonable precautions, and shall not in any event contain more than 0.2 percent by volume of oxygen;

(g) have a temperature not exceeding 54°C; and

(h) have a total heating value of not less than 36.00 megajoules per cubic meter.

12.08 Refusal of Delivery by Shipper. If residue gas delivered by Westcoast to or for the account of a Shipper at a Delivery Point fails to conform with the applicable specifications set forth in this Article, Shipper may, without prejudice to any other right it has, refuse to take delivery of such residue gas in which case:

(a) Shipper shall give notice of such refusal to Westcoast setting forth the reasons therefor; and

(b) Shipper shall accept deliveries of gas when the failure to conform has been remedied by Westcoast and notice to that effect has been given by Westcoast to Shipper.

Appendix G

Questions to be answered by Biomil AB for Electrigaz Technologies Inc

You may put your answers along with references in the text, beside the question, as you progress.

1. What is the typical residual amount of O_2 left in biogas after biological desulphurization (in digester or in a separate container):

Biological desulphurization means that sulphur oxidizing bacteria oxidize hydrogen sulphur to sulphur or to an acid. This process needs oxygen to occur. See below.

$2H_2S + O_2 \rightarrow 2S + 2H_2O$ (1)

$2H_2S + 3O_2 \rightarrow 2H_2SO_3$ (2)

Reaction 1 is to prefer. Reaction 2 gives a low pH that can be hazardous for the digestion prozess.

The sulphur will be seen as a yellow layer at the liquid digestate in the digestion chamber or at walls.

The efficiency of the biological desulphurization depends on the following:

- Enough oxygen where the desulphurization takes place, especially where the digestate meets the gas at the top of the chamber, or for instance at constructions above the digestate.

- Enough place for the bacteria to be active with desulphurization.

- Enough time for the oxygen molecules in the desulphurization zone.

Theoretically, it shall be 0,5 mol O2/mol H2S according to reaction 1. (1,5 mol O2 /mol H2S according to reaction 2, but this reaction is not preferable).

The desulphurization bacteria (Thiobaccilus bacteria) live from oxygen, hydrogen sulphur and nutrients. If the bacteria shall be active, then oxygen, hydrogen sulphur and nutrients *have to be dissolved in water*. This means the the oxygen has to be dissolved into water in order to be used by the bacteria. The oxygen dissolves into water according the the Henry law. This means that there will always be oxygen left in the biogas, since all oxygen will not dissolve into water and be used of Thiobacillus bacteria.

Biological desulphurization is a means for reduction of the hydrogen sulphide content. The hydrogen sulphide content to a CHP shall preferable not be above 100 ppm. Figure 1 shows the typical residual amount of O_2 left in biogas after biological desulphurization. Figures are from measurements in Freistaat Sachsen, Germany.
X-axis: O_2 content [vol-%] in the biogas after desulphurization.
Y-axis: H_2S content [ppm] in the biogas after desulphurization.

A statement from figure 1 is that the oxygen content in the biogas after desulphurization will be about 0,5 – 1,8 vol-%, and in this cases the H_2S contents will be 60 – 200 ppm after desulphurization (exept for extreme 1100 ppm). The research did not show hydrogen sulphide content in the biogas before desulphurization, but the normal H_2S content in biogas was said to be 500 – 3000 ppm.

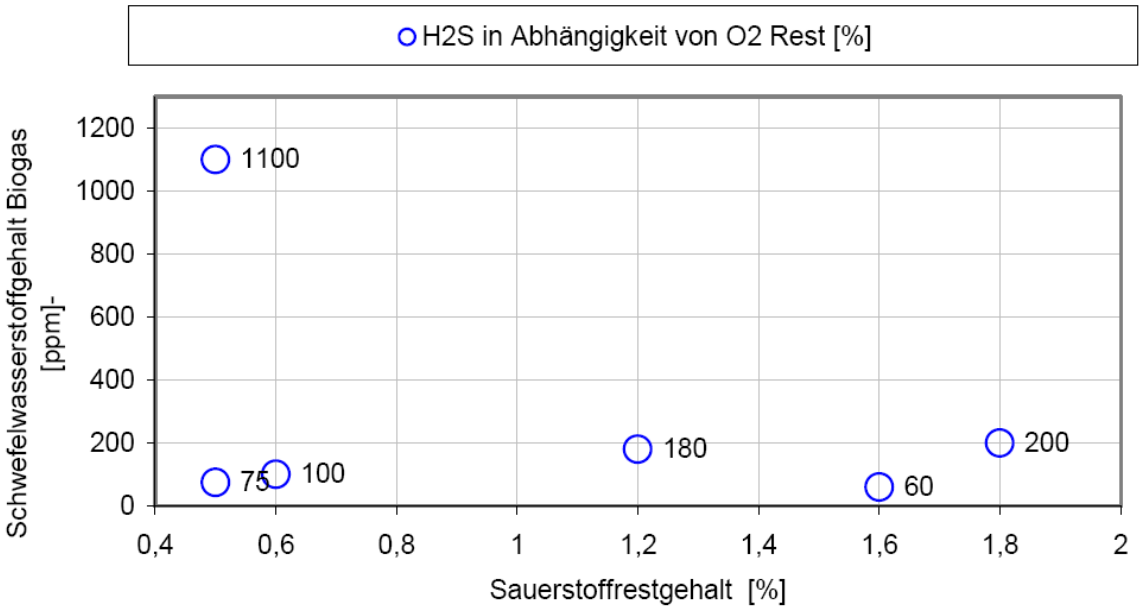

Figure 1. H_2S content after desulphurization in relation to O_2 content in the biogas after desulphurization[1].

Up to 6 vol-% of air will be injected by biological desulphurization. This means that also nitrogen will be injected. This means that biological desulphurization is not suitable if the biogas shall be upgraded. [2]

[1] Verbesserung von Entschwefelungsverfahren in landwirtschaftlichen Biogasanlagen (2006) Prof. Dr. – Ing. N. Mollekopf, Technische Universität Dresden
[2] http://www.biogas-netzeinspeisung.at/technische-planung/aufbereitung/reinigung/entschwefelung.html

2. Methane emissions from each technology:
    - Conventional PSA:
    - Water scrubbing with regeneration:
    - Water scrubbing without regeneration:
    - Membrane separation:
    - Chemical absorption

Swedish Waste Management, an organization for landfill owners and waste treatment plants in Sweden, has an ongoing project for measurement of methane emissions from biogas production plants and from upgrading plants. BioMil AB has been involved in writing the criteria for the evaluation, and now Vattenfall Power Consultant are working with measurements of methane emissions from upgrading plants. Figure 2 shows methane emissions from upgrading plants in Sweden, showing methane loss from methane in the raw biogas, in comparison with total methane flow in purified biogas. The measurements have been done during 2007, by consultant Magnus Holmgren.

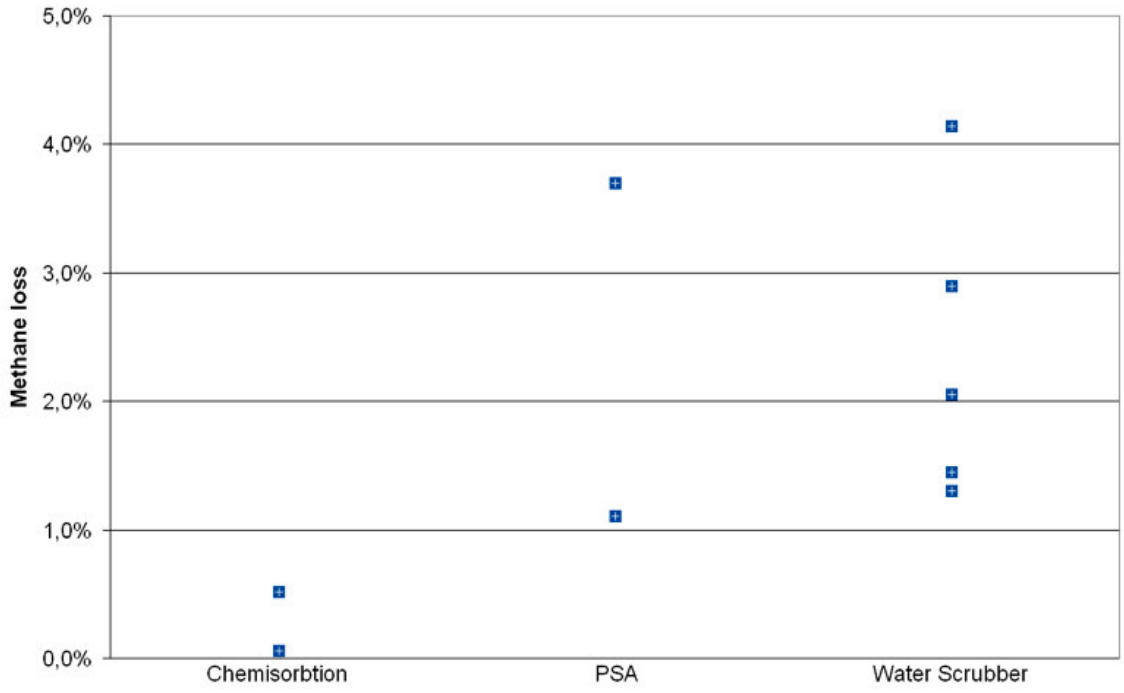

Figure 2. Methane slip from upgrading plants[3] before thermal oxidation of methane.

Note: Methane losses according to figure 2 does not necessary show methane emissions to the atmosphere. By using a Vocsidizer, the methane slip to the atmosphere will be reduced to < 0,2 %. This is suitable for reduction of methane emissions from PSA and Water scrubber technique.

[3] Voluntary system for control of emissions of methane, Magnus Holmgren, Vattenfall Power Consultant. Presentation at 2nd Nordic Biogas Conference, 5 March 2008.

At the Filborna Landfill in Helsingborg, they have installed a water scrubber upgrading unit during spring 2008. They have a Vocsidizer for reduction of methane losses to <0,2 % from the water scrubber.[4] See picture below from Helsingborg.

Source: MEGTEC Systems AB

The methane emissions from the Water Scrubber is depending on a proper design of system pressure, temperatures and proper sizes of absorption colone, flash tank and desorption colone. Water scrubbing with or without regeneration of process water has no influence on methane emissions.

Methane emissions from Water Scrubber technique is today guaranteed to be max 1 %. Methane emissions from PSA, delivered by Carbotech Engineering, is today max 1,3 %. New PSA units have 6 colones today, instead of 4 that was normal before. This has reduced the methane losses.

Methane emissions from chemical absorption plants with amine wash has shown to have very low methane emissions. Measurements at the plant in Gothenburg shows <0,1 %.

[4] Tomas Reinhold, technical mangager at NSR Filborna, Helsingborg

Methane emissions from conventional membrane technique is about 10 %. See attached broschure from Air Liquide.

In Austria, a demonstration project in 2007/2008 for biogas upgrading with membrane technique of 180 Nm^3/h has shown that the methane losses is significantly lower than 10 %. However, precise measurements have not yet been done. Since all vent gas from the membranes goes to a CHP, the methane losses to the atmosphere can be reduced to almost 0 %[5]. See figure 3 below, membrane upgrading plant in Austria.

Source: 2nd Generation Biodesel and Biogas as a Fuel – Research Activities of a Mineral Oil Corporation
Walter Böhme, Head of Innovation OMV AG, Berlin, 27.11.2007

Figure 3. Demonstration plant for biogas upgrading with membrane technique. The plant was commissioned during fall 2007 in Bruck, Austria.

MEDAL Membrane solutions

The Biogas is a mixture of gases (typically 45% CO_2 and 54% CH_4). After collection and compression , medium pressure Landfill gas or Biogas passes through a pre-treatment unit. Before being sent to the pipeline and city consumers, the CO_2 content must be reduced below 2%. MEDAL membrane systems will selectively separate methane and CO_2. *High selectivity makes* ***90%+ methane recovery*** *available with a two stage membrane system.*

[5] Michael Harasek, Technical University in Vienna

3. Capital and operating cost of FeCl technology for H_2S removal:

The technology of ferric chloride addition for H_2S removal

To add ferric chloride to the biogas process to reduce the content of H_2S in the biogas is a well-tried method for H_2S removal. Many biogas plants that treats protein rich substrates, like wastes from slaughterhouses, adds ferric chloride to reduce the amount of H_2S in the raw biogas. At plants that mainly treat wastewater sludge there is normally no need for addition of ferric chloride due to the main composition of this substrate. As well many wastewater treatment plants add ferric salts for phosphorous removal in the water treatment process, and thus the sludge contains enough ferric ions to bind the H_2S during the digestion process. The use of ferric chloride also has considerable impact on smell reduction and is at some plants used as much according to this property as to H_2S removal.

The dosage of ferric chloride is depending on the composition of the substrate being treated in the biogas plant and to what level the content of H_2S is aimed to be reduced. The dosage used differs from time to time and between different biogas plants. The dosage is best adjusted according to the actual value of H_2S in the raw gas, which should be measured on a regular basis.

For illustration 3 different biogas plants in Sweden are described:

- At the biogas plant in Linköping the amount of H_2S is kept below 50 ppm in the raw gas by adding 1-10 g of ferric chloride for each liter of substrate. As an average about 1 g Fe per liter substrate is used. The ferric chloride at this plant is a special mixture with both Fe^{2+} and Fe^{3+} patented by Scandinavian Biogas. The ferric chloride is added in the mixing tanks, where different substrates are being mixed, before hygienisation and feeding to the digesters. The mixing tanks are being stirred of mechanical mixers that give sufficient turbulence for a good mixture while adding the ferric chloride.

- At the biogas plant in Kalmar the amount of H_2S is kept below 100 ppm in the raw gas by adding 1 g of ferric chloride for each liter of substrate. The ferric chloride consists of 13, 8 % Fe^{3+} and is being delivered by Kemira Kemwater with the commercial name PIX-111. The ferric chloride is added in the receiving tanks of the biogas plant during stirring of mechanical mixers. As the ferric chloride is added already in the receiving tanks a lot of problem with smell has been solved.

- At the biogas plant in Borås the amount of H_2S is kept below 100 ppm by adding, as a mean value, 4 g of ferric chloride for each liter of substrate. The ferric chloride used is of the same kind as the one used in Kalmar. The mixing point at this plant is inside the biogas digester and the addition is made at the same time as new substrate is added to the digester. New substrate is added

discontinuously and both substrate and ferric chloride are added into a small tank, which is flooded, at the top of the digester.

Estimated capital cost

The equipment needed for addition of ferric chloride for H_2S removal at a biogas plant is mainly a storage tank for ferric chloride, placed in a way so that chemical deliveries can be made safely, and a dosage system with pump and regulation devices. For the mixing point a mixer/stirrer is needed, or that the mixing point is at a place with good turbulence of the substrate. Normally no extra mixer/stirrer is needed as the mixing point for example can be chosen to be in a receiving tank equipped with a mechanical mixer for mixing of different incoming substrates. As ferric chloride is a corrosive chemical special material is needed for the dosage and storage equipment. The dosage pump has to be in a corrosive protected material and tubings and valves should be made of plastic, or steel covered with rubber. For better persistence of storage tank and dosage equipment it is advantageously placed under a weather shelter or indoors. Care also has to be taken to danger of freezing of tubings and storage tank if the temperature might decrease to 15 °C below cero.

Estimated cost for a 10 m^3 storage tank and dosage equipment, including safety measurements such as a safety retaining tank around the storage tank, regulated safety valve for dosage pump and flow alarm signal, is 140 000 SEK, corresponding to about 23 400 CAD.

Estimated operation cost

The operational cost for reduction of H_2S by addition of ferric chloride is mainly due to the chemical cost, and the amount of ferric chloride needed is strongly dependent of the actual substrates feeded to the biogas plant. The cost of ferric chloride at the Swedish market is about 1000 SEK/ton, but depends considerably of amount bought. As ferric chloride is a liquid, and contains a lot of water, the chemical normally is being produced more regionally. Contact with the Canadian partner of Kemira has been taken for more accurate regional costs. As no response yet has been received, the Swedish cost for ferric chloride has been used for the cost estimation.

As a general guideline the operational cost is estimated to be around 4 SEK/ m^3 substrate, corresponding to 0, 65 CAD/ m^3 substrate, using an average dosage of 4 g ferric chloride/liter of substrate. A cost span between 1-7 SEK/ m^3 is however possible.

4. Amounts of water used for water scrubbing with and without regeneration:

The amount of water that is needed for absorption of a certain amount of carbon dioxide is dependent on pressure and temperature, see figure 4 below. Water absorbs more carbon dioxide with higher pressure and lower temperature.

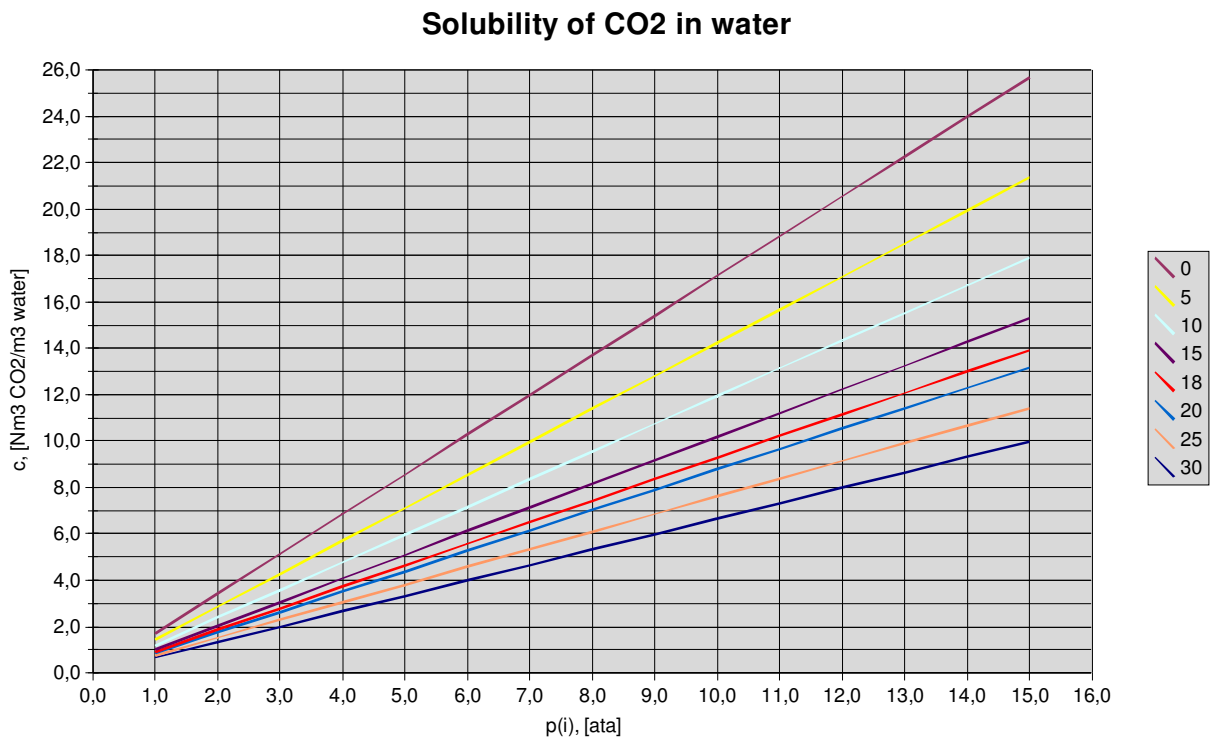

Figure 4. Solubility of CO_2 in water.

Amounts of water used for water scrubbing without regeneration

See flow chart below.

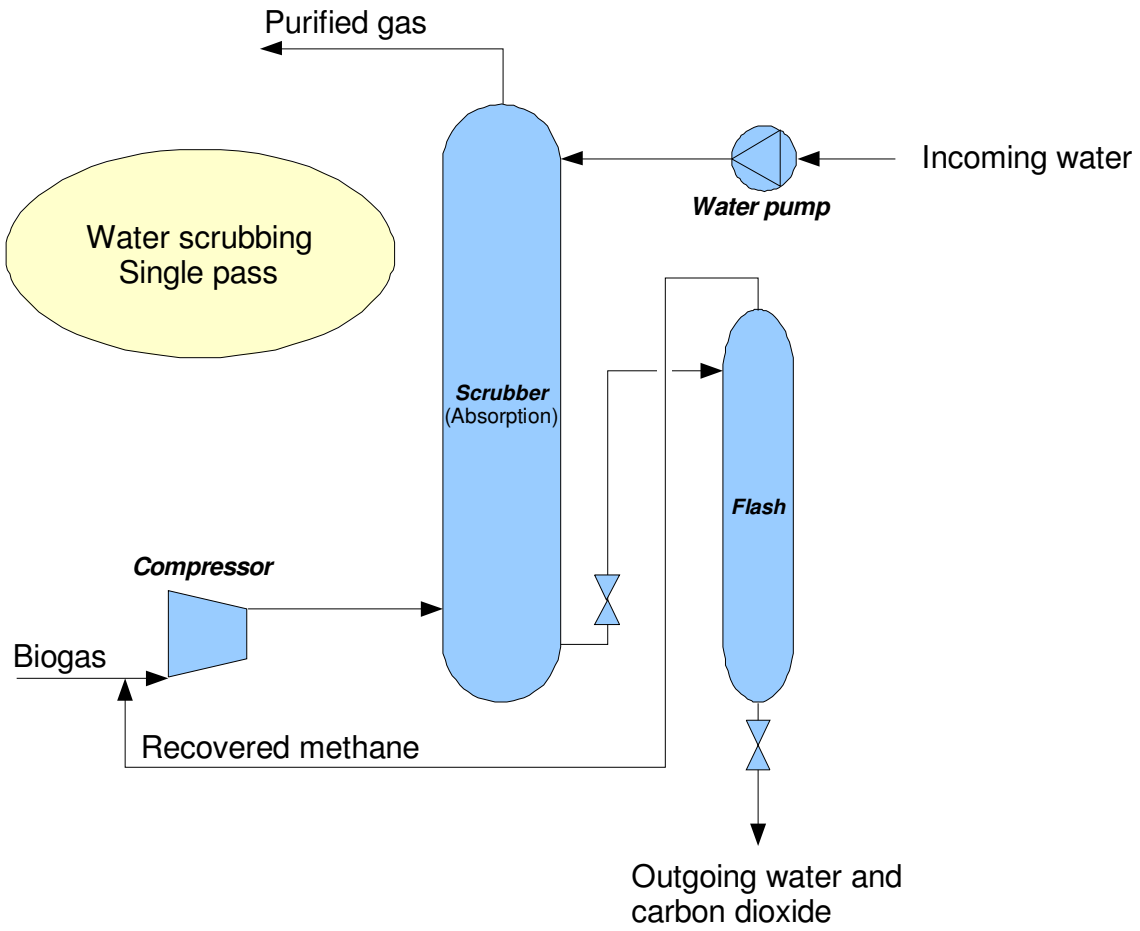

Amounts of water that is needed for a water absorption process without regenerations is seen in table 1. Figures are from plants in Sweden.

Table 1[6].

Raw biogas capacity [Nm^3/h]	System pressure [ata]	Water consumtion [m^3/h]	Specific water consumtion [m^3/Nm^3 raw biogas]
300	10-13	30	0,1
150	8-12	30-35	0,2
80	7,5	11-14	0,14 – 0,18

[6] SGC report 142, Margareta Persson (2003)

Amounts of water used for water scrubbing with regeneration

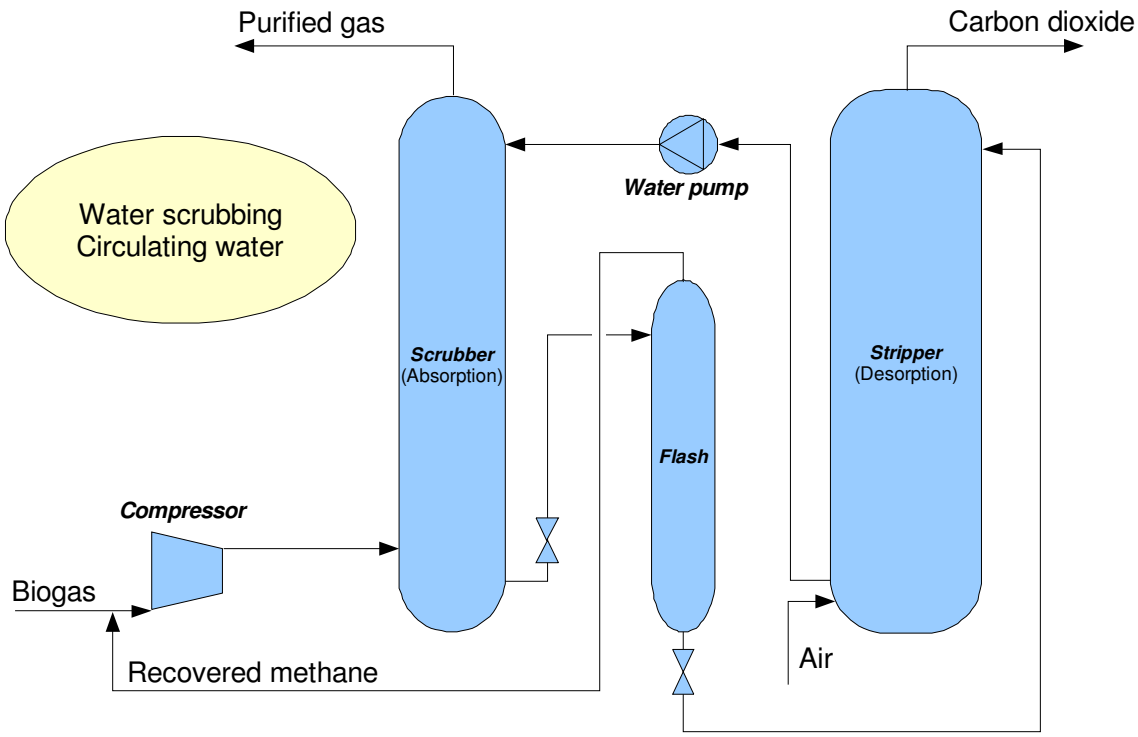

According to SGC report 142, a plant for water absorption with regeneration with a raw biogas capacity of 1400 Nm3/h uses up to 2 m^3 water/h. The system pressure is 8 bar. The corresponding specific water consumtion is 1,4 liter water/ Nm^3 raw biogas.

Malmberg Water AB today guarantees a maximum water consumtion of 3 liter water/Nm^3 raw biogas. The water consumtion depends on water quality and hydrogen sulphide content in the biogas. See further explanation under question 8.

5. Equipment used for injection + flowsheets (compressing, monitoring, safety…):

In case that the natural gas has a higher heating value than the upgraded biogas, then propane has to be added to reach the same heating value as natural gas. See lower heating values below:

methane: 9,97 kWh/Nm^3

propane: 25,9 kWh/Nm^3

natural gas 11,1 kWh/Nm^3 in Sweden

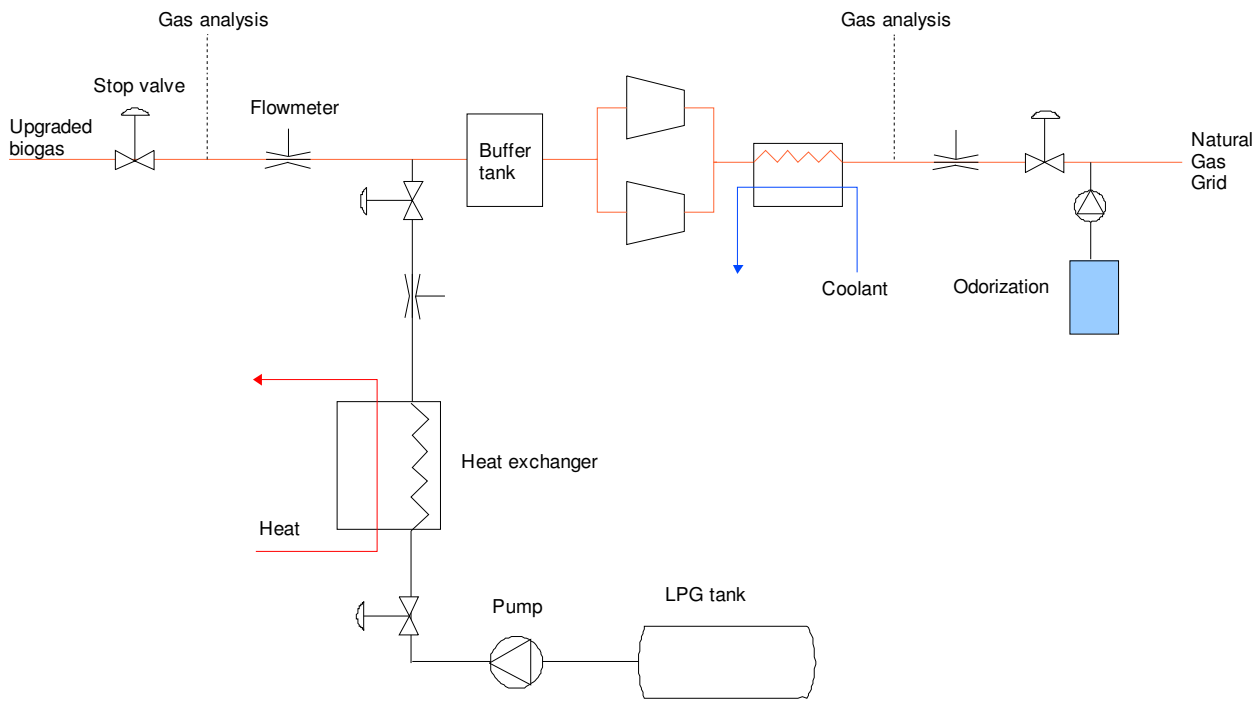

The propane addition equipment consists of:

- A LPG tank for propane in liquid phase
- Pump for liquid propane
- Evaporation unit for propane
- Heat exchanger system for the evaporation unit

The heat exchanger for evaporation of propane takes heat from the gas chilling heat exchangers after the compressors, in case that compressors are needed. Additional heat will be taken from an external heating system.

A flow computer takes signals from the flowmeters for flows of incoming upgraded biogas, product gas and propane. It also takes information from gas analysis equipment for analysis of upgraded biogas and product gas. Propane addition will be regulated as following:

- A gaschromatograph measures the methane content in incoming upgraded biogas and a flowmeter measures the flow of upgraded biogas. From this analysis, the volume for propane addition is calculated. Gas analysis takes place around every third minute.
- A gaschromatograph measures the methane content in product gas after propane addition, and a flowmeter measures the flow of product gas. From this analysis, the propane addition flow is set. Gas analysis takes place around every third minute.

The flow computer can generate alarms. For instance if the product gas has a to low heating value.

The flow computer sends a signalto the odorization pump, so that a correct amount of odorization liquid will be added to the gas. The odorization is proportional to the product gas flow.

6. Capital and operating costs and energy use for each technology, including cleaning and injection at 4 atm:
    - Conventional PSA:
    - Water scrubbing with regeneration:
    - Water scrubbing without regeneration:
    - Membrane separation:
    - Chemical absorption:

Capital costs

Capital costs for biogas upgrading with PSA, Water Scrubber or Chemical absorption have shown to be very similar for similar capacities. The choice of upgrading technique often depends on circumstances that affects the operational costs. For instance, chemical absorption with amine wash is interesting in case that steam with 120-130 °C is available, especially if the steam has been produced from an energy source that is cheaper than biogas. The chemical absorption needs about 8-10 % of the energy in the biogas, in order to regenerate the chemical.

The figure below shows investment costs for upgrading units installed in Sweden 1996 – 2006.

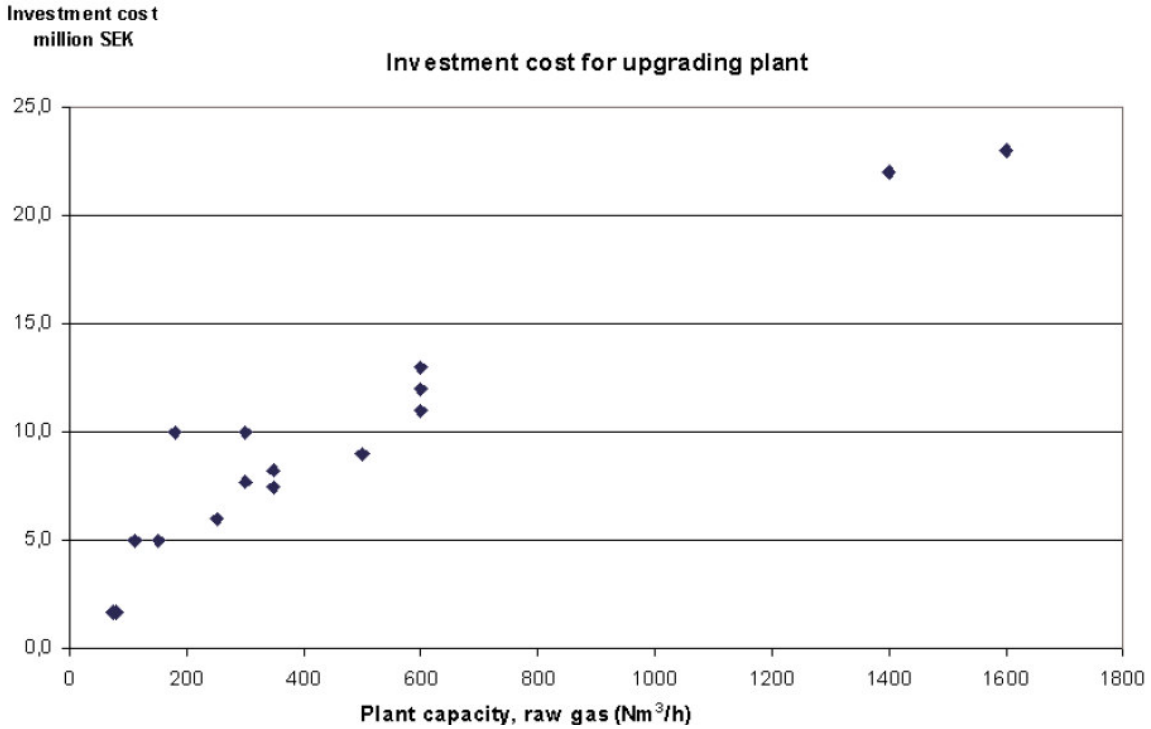

Source: M Persson, Utvärdering av uppgraderingstekniker för biogas (Evaluation of upgrading techniques for biogas) SGC report 142, 2003. Complemented with information from five other plants.

Estimations of capital costs for PSA, Water Scrubber and Chemical absorption for some raw gas flows. Estimations are partly based on tenders for upgrading units in Sweden during 2007.

BioMil estimations of capital costs for upgrading units in different sizes.

Raw gas flow capacity [Nm^3/h]	Investment cost [CAD $]
50 - 100	1,2
100 - 200	1,7
200 - 400	2,3
400 - 800	2,8
800 - 1600	3,8

Outgoing pressures:
From PSA: 4 bar(g)
From Water scrubber: 7 – 10 bar(g)
From Chemical absorption: 150 mbar (g) from upgrading process. Compressors for compression up to 8 bar(g) is included in estimated capital costs above.

The pressures from PSA and chemical absorption will be set to maximum 4 bar(g). The pressure from the water scrubber has to be reduced to 4 bar(g).

Capital costs for propane addition

The investment cost for the system below (excluding compressors since it is not necessary to compress the gas further) is 2 Mkr, equivalent to 335 000 CAD $.

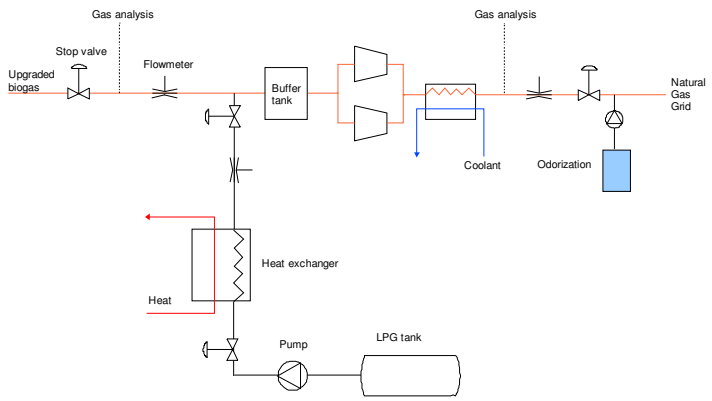

Investment costs for propane addition equipment[7].

	Investment cost [CAD $]
Propane tank, 100 m^3	85 000
Propane pump, heat exchanger, vessels, flow meters, regulation system, gas analysis equipment and an odorization unit.	200 000
Electricity installations	50 000
Total	**335 000**

Costs to be added are costs for pipes from the propane addition equipment to the natural gas grid.

[7] Source: Lars Andersson (BioMil AB), project leader for establishment of an upgrading unit at the waste water treatment plant in Helsingborg. The propane addition equipment is today, March 2008, under commision.

Operational costs

	Chemical absorption	Water scrubber	PSA
Heat [kWh/Nm^3 raw biogas]	0,55	0	0
Electricity [kWh/Nm^3 raw biogas]	0,12	0,3	0,27
Water [liter/Nm^3 raw biogas]	0	3	0
Service [CAD $/$Nm^3$ raw biogas]	0,003	0,003	0,003
Personnel [h/year]	150	150	150
Material[CAD $/$Nm^3$ raw biogas]	0,009	0,005	0,005
Methane losses [vol-% of methane in raw biogas] (not necessary methane losses to atmosphere, se question 2)	< 0,1	1	1,2

7. Capital costs for propane addition

The investment cost for the system below (excluding compressors since it is not necessary to compress the gas further) is 2 Mkr, equivalent to 335 000 CAD $. *The picture below is updated.*

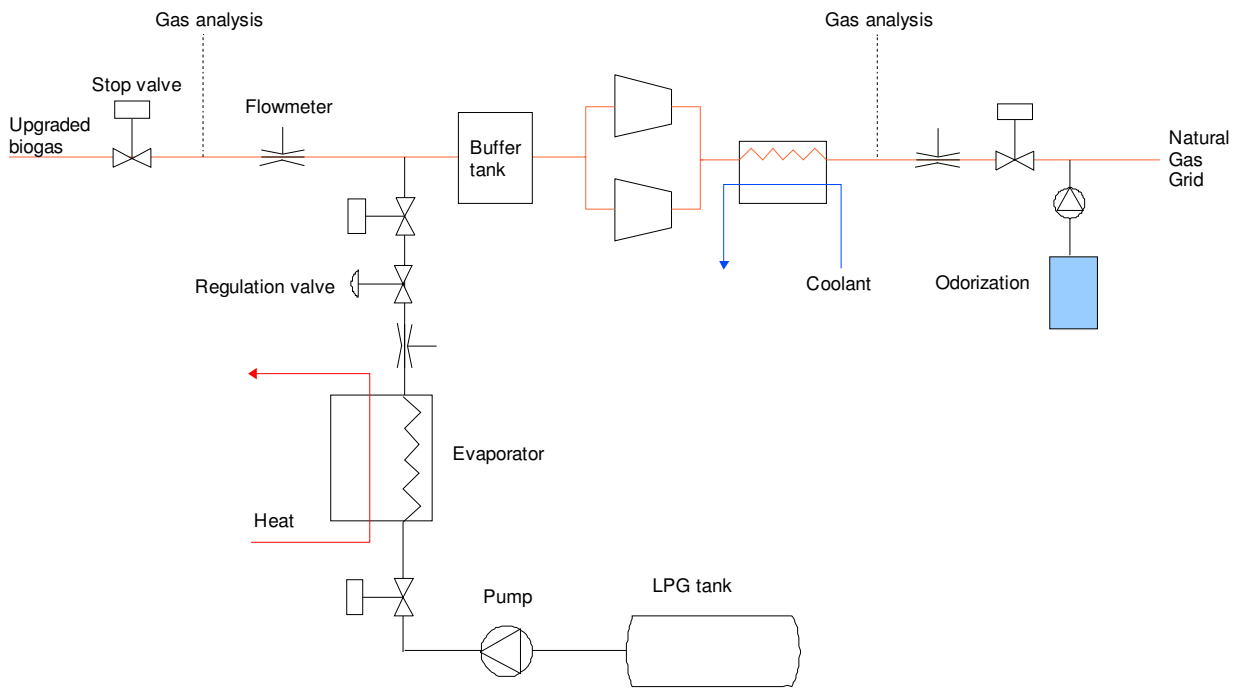

Pressure and temperature of upgraded biogas, evaporated propane and gas mixture will be measured (not shown in figure above).

Investment costs for propane addition equipment[8].

	Investment cost [CAD $]
Propane tank, 100 m^3	85 000
Propane pump, heat exchanger, vessels, flow meters, regulation system, gas analysis equipment and an odorization unit.	200 000
Electricity installations	50 000
Total	**335 000**

Costs to be added are costs for pipes from the propane addition equipment to the natural gas grid.

[8] Source: Lars Andersson (BioMil AB), project leader for establishment of an upgrading unit at the waste water treatment plant in Helsingborg. The propane addition equipment is today, March 2008, under commision.

Can you enlighten me about propane addition. You wrote that it costs 335 000$CAD as an investment. In a study in which Biomil participated called "Adding gas from biomass to the gas grid" it says, page 47 that the total investment would be 39 000euro (62 400$CAD) for 400nm3/h. Which one is true?

The estimation that was done in "Adding gas from biomass to the gas grid" is valid for the system in Laholm. 62 400 $CAD includes a pump, a flow meter and an evaporator. The cost for the tank is excluded in that cost. This is a very simple system that calculates the right amount of propane dosing, but it does not get any feedback concerning whether the gas mixture really contain the right amount of propane.

The system for propane addition that we have shown in picture above is the system that is today used in Sweden and Germany. This is a system that is necessary if the gas grid owner has very high demands to get a correct gas quality. The propane addition unit has its own regulation system and flow computers. There is a separate room installed for the analysis equipment.

8. Capital costs for upgrading units

The table below shows investment costs for four plants that have recently been purchased.

Upgrading technique	Installation year	Maximum raw gas capacity [Nm3/h]	Investment cost [$CAD]	Reference
Water scrubber, Malmberg Water AB	2008	650	2 350 000	NSR Helsingborg, Tomas Reinhold, technical manager at NSR. The water scrubber includes a Vocsidizer for a cost of approximately 330 000 $CAD.
PSA, Carbotech	2006	500	2 000 000	Wrams Gunnarstorp biogas plant, owned by E.ON Gas. Contact person Staffan Ivarsson
Amine Wash (COOAB), Purac AB	2008	200	1 330 000	Upgrading unit to Kalmar Biogas AB, Kalmar community. Press release at www.lackebywater.se The upgrading unit will be commissioned in August 2008
Water scrubber, Malmberg Water AB	2008	250	1 820 000	Helsingborg waste water treatment plant. Contact person Lars Andersson (BioMil), project leader for Helsingborg community. (The building is very nice, not a container.)

9. Energy used for injection at 500psi (33 atm):

Calculations made by BioMil AB.

Upgrading technique	Pressure from upgrading unit	Pressure after compressors	Electricity consumtion [kWh/Nm3]
Amine Wash (COOAB)	150 mbar(g)	4 bar(g)	0,086
Amine Wash (COOAB)	150 mbar(g)	33 bar(g)	0,24
PSA	4 bar(g)	33 bar(g)	0,12
Water scrubber	10 bar(g)	33 bar(g)	0,063

Note that the electricity consumtion from 150 mbar(g) to 4 bar(g) is 0,086 kWh/Nm3 for upgraded gas from the amine wash. This means that to the operational costs mentioned under question 6 in the previous document, electricity consumtion for amine wash needs to be added. An advantage for the amine wash is that compression work doesn't have to be wasted on the carbon dioxide, since the compression will take place after the upgrading unit. Before the upgrading, only blowers are used. So, 0,086 kWh/Nm3 shall be added to the pure methane content(plus O2 and N2), and not to the raw gas consumtion.

10. How much H_2S can water wash technologies withstand when we regenerate the water?

The H2S content seems to affect the efficiency of the packing material in the scrubber and desorption colone. At the water scrubber plant in Västerås, delivered by YIT in 2005, the maximum H2S content in biogas was set to 1500 ppm.

The problem is that a high H2S content makes the surface tension high on the packing material, which makes the area for water and carbon dioxide to meet each other less. At the water scrubber plant at the landfill NSR in Helsingborg, they have had this problem during the commission period of the scrubber during spring 2008.

The answer how to withstand H2S contents above 50 ppm is to add a chemical for lowering of the surface tension at the packing material. The chemical will be dosed to the water. It is actually a pretty miraculous chemical. In Helsingborg, where the scrubber has a maximum capacity of 650 Nm3/h, only ¼ litre has to be dosed every week. The chemical is called kontra spum and costs 3,5 $CAD/kg. The density is like water. The chemical is not in any way hazardous.

11. *How are related the H_2S concentration with the amount of water to replace?*
Very high amounts of water would be needed, in case that the chemical for lowering of surface tension would not be used. BioMil has not investigated how much, but we now that it is very much water that would be needed.

12. *What levels of H_2S can be expected after a water wash process?*
Less than 1 ppmv.

13. What is the typical level of NH3 in biogas from farm waste with no biological desulphurization in digester? What is it when there is biological desulphurization?

The typical level of NH3 in biogas is virtually 0[9].
We have not found any reports that describes the relation between oxygen and ammonia content in the biogas. Theoretically, there should be some more ammonia if air (oxygen) is added.

According to the German Wikipedia, there should be 0,01 – 2,5 mg NH3/Nm3 biogas[10] with an average value of 0,7 mg/Nm3.

The BioMil experience is that there is no NH3 in biogas. We have never smelled any NH3 in biogas.

14. Additional information concerning methane losses

The difference between methane losses from a water scrubber with regeneration, in comparison with a water scrubber without regeneration, is that a vocsidizer can not be used for a system without regeneration. All the methane will be dissolved into the water that goes out. With a desorption colone (a system with regeneration), it is possible to let the strip-air going through a vocsidizer.

[9] Dahl (2003) System för kvalitetssäkring av uppgraderad biogas, SGC report 138
[10] http://de.wikipedia.org/wiki/Biogas

15. Email conversation about electricity versus upgrading.

Hi Francois
Anders will try to contact Malmberg Water in order to get a overview concerning how the different costs of an upgrading plant are divided.

In Germany, it is not really a shift from electricity generation. The only difference is that they try to produce the electricity where there is a demand for the heat. Instead of producing electricity at many small scale CHPs, it is also more efficient and cost effective to produce the electricity at bigger plants. The natural gas grid is a mean for distribution of upgraded biogas to:

a) a place where electricity + heat is needed
b) a place with a bigger CHP with economies of scale

But of course, the biogas will also be used for filling stations that are connected to the natural gas grid. In Germany, they have about 1000 gas filling stations.

Yes, we will revise your document that comes to us on Monday.

With best regards
Johan Benjaminsson

Från: Francois Handfield [mailto:francois@electrigaz.com]
Skickat: den 7 april 2008 17:46
Till: 'Johan Benjaminsson'
Kopia: 'Anders Dahl'; 'Eric Camirand'
Ämne: Interim report biogas upgrading

Hi Johan and Anders.

Thanks for everything, we have plenty of data for a report.

Can you get us an estimate of the relative costs of each component in upgrading systems? (engineering, pressurized vessels, controls, etc)
We will try to explain differences in costs from European upgrading systems with north American ones.
Also, what impact do you think that the shift towards grid injection in Germany rather than electricity generation will have on the industry worldwide?

We are a bit in a rush right now, we'll send you an interim report during the weekend so you'll have it in your mailbox Monday morning the 14th. Can you revise our document and put your comments in the word document by Tuesday the 15th, 19h your time?

Francois Handfield
Project Manager
Electrigaz Technologies Inc.
www.electrigaz.com
T. 819-687-2875

16. Email conversation about grid injection

Hello
The main reason for the fast shut-off valve is to protect the grid from possible overpressure. The Germans also wanted a remote control to be able to shut the valve if they detected off-spec gas.

To be frank I am not sure why the grid owners demand these very accurate measurements. In Germany one reason might be that the authorities have decided to open the grids for biogas but the grid owners do not agree. As a result the try to make the injection as complicated and costly as possible.
Another reason could be that the grid owners (both in Sweden and Germany) are afraid that customers could complain if they suspect that the heating value is lower than contracted.
Otherwise I agree with you that there is no technical reason to have these very accurate measurements, and probably no economical either as the mean heating value over a period of time will be within specification.

Best regards
Anders

tisdag 06 maj 2008 15:39 skrev du:
> Thanks a lot Anders,
>
> Why is there a fast shut-off valve and why did grid owners in Germany
> and Sweden demand for more accurate quality and flow measurement?
>
> Thanks again,
>
> Francois Handfield
> Project Manager
> Electrigaz Technologies Inc.
> www.electrigaz.com
> T. 819-687-2875
>
> -----Original Message-----
> From: Anders Dahl [mailto:anders.dahl@biomil.se]
> Sent: May 5, 2008 11:15 AM
> To: Francois Handfield
> Cc: Johan Benjaminsson
> Subject: Re: A question for Biomil
>
> Dear Francois,
>
> The injection system will become fairly simple if you do not have any
> propane addition. This means that the upgraded gas is added to the
> grid without any further treatment. The only thing you need is a
> "security system" to assure that off-spec gas is never injected to
the
> grid.
> The function of a buffer tank is to allow for mixing of propane and
> upgraded
>

> gas. Without propane addition you don't really need a buffer tank
> unless you
>
> want a short delay for the gas before it enters the grid. This is to
> get some time (couple of seconds) to shut the outlet valve if the gas
> becomes off-spec at any time.
> The additional equipment you actually need for the injection is:
> 1. Shut-off valve (pneumatic, controlled from the PLC), EUR 1 500
>
> 2. Pressure regulator (mechanical, controlled by differential
> pressure), EUR 2 500
>
> 3. Fast shut-off valve (mechanical, controlled by differential
> pressure), EUR 3 500 Numbers 2 and 3 may be combined to one unit
>
> 4. Buffer tank (can be omitted),
> EUR 3 500
>
> 5. Quality assurance system (gas analysis), EUR 0-145 000
>
> 6. Odourisation,
> EUR 12 000
>
> 7. Connection piping,
> EUR 1 000
>
>
> The extra piping needed is not very much because you only need to
> connect the grid pipe with the outgoing pipe for upgraded gas. The
> valves are mounted after the buffer tank (if any).
>
> The quality assurance system is (or can be) the most complex and
> costly part
>
> of the system. In my opinion you could add a simple meter, either
> specific gravity as you propose or a CH4/CO2 analyser but since the
> upgrading plant already is equipped with analysers for CH4, CO2, O2,
> H2S and dew point
> (H2O)
>
> it is not really necessary to add more analysers.
> In this case the cost is EUR 0 - 5 000 In recent projects in Sweden
> and Germany thou, the grid owners have demanded
>
> very accurate monitoring of the gas quality and flow rate. This
> involves Wobbe meters or gas chromatographs, flow meters, remotely
> controlled shut-off valves and flow computers. For one project in
> Germany the price for this was
>
> EUR 145 000.
> The advantage of a gas chromatograph compared to a Wobbe meter is
that
> all components in the gas can be analysed. This is important in the
> analysis of natural gas (from the North Sea at least) that contains a
> wide range of hydrocarbons as well as carbon dioxide and nitrogen.
For

> upgraded biogas without propane addition it is overkill in my
opinion.
> Disadvantages with a GC is that it is not really on-line but analysis
> samples appr. every 3 minutes. It also needs both calibration and
> reconditioning of the separation columns as well as a continous flow
> of carrier gas (nitrogen or helium).
> In Sweden the cost for a Wobbe meter is around EUR 22 000 and the
> price for a GC is in the interval EUR 18 000 to 30 000. The lower
cost
> is for use in non
>
> hazardous areas, that is non explosion proof.
>
> Hope this answers your questions. If not, please contact me again.
>
> Best regards
> Anders
>
> tisdag 29 april 2008 20:54 skrev du:
> > Dear Biomil,
> >
> >
> >
> > We had comments from the steering committee for the draft of the
> > first
>
> half
>
> > of the report and it seems that we are on the right track so far.
> >
> >
> >
> > Besides that, we were asked to provide more details about the
> > equipment needed for grid injection.
> >
> >
> >
> > -What is the cost breakdown for a typical injection system with no
> > propane addition:
> >
> > Piping, valves, gas analysis (chromatograph, wobbe index meter,
> > etc), flow meter, remote connection with utility, control system,
> > buffer tank (and
>
> why
>
> > is it needed), odourization.
> >
> > -What are the advantages of chromatographs? Why use such an
> > expensive device when a simple specific gravity meter can indicate
> > any change in gas composition in which case discrete sampling can
be
> > performed for troubleshooting?
> >
> >
> >
> > Thank you in advance,

> >
> >
> >
> >
> >
> > Francois Handfield
> >
> > Project Manager
> > Electrigaz Technologies Inc.
> > www.electrigaz.com <http://www.electrigaz.com/> T. 819-687-2875

--

Anders Dahl
BioMil AB
Trollebergsvägen 1
222 29 Lund
Telefon: 046-148070
Mobil: 0703-172599
Fax (ring först!): 046-144015
e-post: anders.dahl@biomil.se